aero=naut

SHK

RC-Sailplane

Order-No. 1125/01

SHK Sailplane

Order-No. 1125/01

Technical Data

Wingspan	4,000 mm
Length	1,501 mm
Wing area	82 dm²
Flying weight	ca. 4,300 g
Wing loading	52.4 g/dm²
Wing airfoil	Selig S4233 mod.

RC-functions

rudder, elevator (V-tail)
ailerons
spoiler
optional: retractable wheel, tow release (***Note:*** Sheet 17 contains parts for tow release servo tray)

Replacement parts

GRP fuselage, white	1125/02
GRP tail cap, white	1125/03
Canopy, frame and vac.-molded cockpit parts	1125/04
Pair of wing panels	1125/05 (foam(obechi)
Pair of tailpanels	1125/09 (foam/balsa)
Wings and tailplane kit	1125/06 (laser-cut parts)
V-tail bellcranks	7492/20

Recommended components

Ailerons:	13 mm thick servos or special wing servos
V-tail and spoilers:	standard servos > 3 kgcm
Battery:	LiPo or NiMH > 2500 mAmps
Options	
Retractable wheel:	Order-No. 7358/12
Tow release:	servo > 6 kgcm

We recommend our aero-pick modellers´s pins for building.

Order-No.: 7855/02

Introduction

This version of the SHK kit includes a GRP fuselage and conventional wings and tailplane as opposed to foam wings and tailplane of the previous version of the SHK. The fuselage is completed as described in this manual, the new built-up wings and tailplane will fit perfectly. Please refer to the included construction drawings as well as to the parts list in this manual for reference.

A special type of building jig, which is typical for most aero-naut models, is used for the wings and tailplane and speeds up the building process considerably. Please follow the illustrated step-by-step instructions in this manual for best results.

Wood (and plywood too) is subject to tolerances. Please check all parts for an easy fit, before you glue. Correct, if necessary.

Parts for wings and tailplane are laser-cut and numbered. Please use the parts list in this manual to identify the included strip wood. Use a sharp modelling knife to cut parts from laser sheets. Use sandpaper to clean any residue of the laser cutting process from the individual parts to get good contact surfaces for gluing. Always check that parts fit perfectly. Correct, if necessary, before you glue. Give glue sufficient time to dry before you begin with the next step.

We recommend white glue (if not otherwise noted) for gluing, which offers good strength and low weight. White glue retains a certain degree of elasticity even after the glue has cured und will stand up to any loads which occur during flying.

Tip: Wings and tailplane of your SHK use maple veneer as a sheeting material. This veneer is reinforced with a cotton fabric on the underside for extra strength and good handling characteristics. For good sanding results seal edges of veneer parts with wood primer to glue individual strands of fabric together.

Fuselage

These building instructions include a reduced-scale drawing of the die-stamped plywood sheets. Write the part number on each component using a soft pencil, referring to this drawing. Cut out the parts from the die-stamped sheets using a balsa knife. All parts should be trial-fitted and trimmed as required before installing them permanently.

You may wish to deviate from the sequence described in these building instructions. Please think carefully about the result of your actions! Use the building instructions and parts list constantly while building the model, and use the actual servos and receiver battery to ensure the best locations. Good mini-servos with a rated torque of around 30 Ncm are completely adequate for the all-moving V-tail.

Cut back the flange of the cabin opening (= support for canopy frame) to an even width of 6.5 - 7 mm; see section A-A. Remove all rough edges.
Glue formers (3+4) together using laminating resin, and trim them to fit in the fuselage. Press the tail pivot support (5) into the former. Position captive nut (8) correctly using the screw (9), and glue it in place using thickened resin. Remove all rough edges from the two tail pivot rods (6) (length = 98 mm), push them into the pivot support (5) and fit the tail panel retainers (7) on them. Cut away the edge of the fuselage to clear parts (7) - see view "X", noting the 43 mm coordinates. Check that the tail pivot support is positioned symmetrically, then tighten the screw (9) to secure it, with the pivot rods (6) resting on the former (4).

To align these parts correctly we need a reference plane in the fuselage which acts as a substitute for the wing. Temporarily fit the joiner rod sleeve (33) in the fuselage and slip the wing joiner rod (44) into it. The double former 3+4 can now be installed in the fuselage together with the parts attached to it. Check alignment, and tack the former in place provisionally. Before gluing the parts permanently, check for symmetry with reference to the wing joiner rod: the position of the tail pivot rods as in view "X". The pivot rods (6) must also be exactly at right-angles to the root tail fairing when viewed from the side. The tail panel retainers (7) should project no more than 8 mm out of the fuselage - see Section E-E. When you are sure everything is right, glue the parts together and to the fuselage permanently using laminating resin, using fillets of thickened resin at crucial points.

Drill out the hub of the tailwheel (14) to 2.1 mm Ø, carefully remove all rough edges from the tailwheel leg (13), and sand the area to be soldered to a bright metal surface. With the wheel fitted (don't forget the washers on both sides), wrap soft binding wire round the leg as shown in sections B-B and D-D and solder the joint. Solder the side washers to the leg at the same time. Glue the tailwheel leg support (21) in place as shown in sections B-B and D-D. Fit the washers (12) and (11) on the screw (9), then the spacer tubes (10), and only then the tailwheel leg. Fit the aluminium plate (22) to complete the assembly. Drill the 3.2 mm Ø hole for the snake (25).

Drill out the outrigger parts (17) and (18) to 2.5 mm Ø at the marked points, and fit these parts in the former (3+4); they must lie parallel to the tail root fairing, and the holes must coincide with the centreline of the airfoil. Tack the parts in place initially using cyano.
The next step is to install the bellcranks, but first check the fit of the pins (56) in the oval hole; carefully adjust the hole using a round needle file if necessary. Parts (56) must glide smoothly in the slot - but without any trace of radial play.

Fit one washer (12) on the countersunk screw (15), followed by a spacer tube and bellcrank (caution - handed pair!), and then two more washers (12). Insert the screw in the outrigger, followed by another part (12) from underneath. Tighten the nut (16) fully. The bellcranks (20) must operate freely and smoothly, and without lost motion; a drop of machine oil may be necessary.

The next step is to check that the system works properly: press the steel pins (56) into the tail panels and fit the panels on the pivot rods (6). At the neutral position the pins (56) must be located at the front end-point of the slot! Operate the bellcranks with your fingers to check that the tail panels follow the movement perfectly smoothly, without binding. When you are sure that everything is correct, apply thin cyano from the underside, and apply more thin cyano to the plywood to stiffen the material.

The outrigger can now be glued permanently to the double former using laminating resin. When the resin has cured open up the slots for the snakes - see section B-B. The base plate (19) is designed to increase the torsional strength of the outrigger; trim it at an angle and glue it in place with laminating resin.

Trim the openings for the wing joiner rod sleeve (33) in the fuselage as required; check that the fuselage width is exactly 148 mm! Adjust the length of the hardwood dowel (32) with the joiner sleeve (33) fitted, and glue it in the fuselage. It is important that it does not push the root area of the fuselage out of shape! Glue it in place securely using thickened resin. Roughen the ends of the joiner sleeve (33) with a file, remove all traces of grease, and glue it in the fuselage using laminating resin.
Assemble the servo mount (30+31), glue the assembly in the fuselage and install the servos.

Note: As an alternative for the die-cut parts sheet 18 contains laser-cut parts for a servo tray which will hold both tailplane servos as well as the receiver. When you glue in place parts A1 and A2, make sure that the rounded side faces the fuselage side.

Fit a threaded coupler (27) and clevis (29) on one end of each of the snake inners (26). Secure the couplers (27) with a drop of cyano, and crimp the sleeve lightly at several points with a pair of pliers to grip the snake inner. Slip the inners (26) into the snake outers (25) (already in place) from the front end. Fit the servo output arms facing the fuselage sides, and connect the clevises to the servos. Position the plywood supports (39) against the fuselage sides exactly as shown on the plan. Tack them in place with cyano, then reinforce the joints with resin. Note that the 20 mm dimensions must be maintained, otherwise you will have problems when installing the cockpit fittings in the fuselage.
Cut out the base plate from the cabin frame (37), and trim the height of the outside edge as shown in section A-A, so that the frame rests snugly on the fuselage at the front. This is easy to do using a razor plane fitted with a brand-new blade. Cut away the oval hand-hold openings. Drill holes in the fuselage as shown, and insert the dowel (38) in them. Sand back the end of the dowel (38) which is to be fitted in the cabin frame, so that it is an easy fit in the recess in the frame. When everything fits correctly, apply glue to the joints and tape the frame to the fuselage.

Detail drawing A shows the plan view of the frame support on the fuselage, together with the cut-out for the support (39). Glue the two parts (39) together, and drill the 2.5 mm Ø hole at an angle as shown. This will be enlarged to 3 mm Ø later.
Glue the canopy latch (40) to a piece of 3 mm plywood using Stabilit Express as shown in Detail A, and glue this assembly in the fuselage using thickened resin. The latch (40) must be positioned in such a way that the support (39) disengages reliably. Open up the hole in part (39) gradually and lock it in place on the fuselage. Align the cabin frame on the fuselage. Check the location of the joint relative to part (39), and sand back gradually until the frame is located perfectly. Glue the parts together carefully, and tape the frame to the fuselage again.
Carefully cut out and trim the canopy, leaving it as long as possible at the rear. A balsa plane (razor plane) set to a fine cut works very well for trimming the plastic. Hold the blade at an angle to the edge of the moulding for best results. There is a bulge in the joint area of the cabin frame, and this must be removed if the frame and canopy are to fit well - see also the "cabin frame" detail drawing on the plan. Either trim it using a sharp file or scrape it back using a stiff knife blade.

The frame should be painted before the canopy is glued to it, but take care not to paint the joint surface. Mask out the fuselage carefully to prevent it sticking to the canopy. Place the cabin frame on the fuselage, align it carefully, and fix it temporarily to the fuselage. Use a good plastic cement for gluing the canopy to the frame. The glued joint is extremely long, so work quickly to avoid the glue hardening prematurely. Place the canopy in position and tape it securely to the fuselage.
The method of assembling the cockpit fittings is self-explanatory. The assembly should be fitted into the fuselage at an angle, then pushed back as far to the rear as possible (mind the servos!); set it horizontal, then slide it forward.

This version of the SHK kit includes conventional built-up wings and tailplane. See detailed building instructions below.

The tailplane panels are fixed to their pivot rods by means of grubscrews (55), which engage in the recesses in the tail panel retainers (7). Drill panles with 5 mm to accept the threaded sleeves (54). Glue in place with epoxy.
The counterbalance weights (58) are simply screwed into the sleeves (57) for flying, and can be removed for transport. Caution: the sleeve is only threaded M2 at the end with the cross-hole. Seal the holes (including the end-hole) with thickened resin, roughen the sleeve and let it into the tail panel tip. Carefully sand the panels overall and make sure that they move freely.

Attach the ailerons to the wings using hinge tape. If you wish to paint the GRP components, sand the surfaces carefully beforehand with 400-grit wet-and-dry paper, used wet.

Recommended control throws for the maiden flight:

- ***Ailerons*** 12 mm up, approximately 4 mm down
- ***Elevator*** +/- 6-7 mm, 50 % Expo; for additional saftey use Dual Rate with increased travel.
- ***Rudder*** +/- 5-6 mm; you may find differential travel useful: a rudder command, e. g. left, causes the left panel to deflect 1 to 1.5 mm less than the right panel. The optimum setting may be different for each individual pilot.
- ***Centre of gravity*** – 90 mm, as indicated on the plans.

We hope you will enjoy many hours of flying your new model. Happy landings!

Servo tray for tow release servo

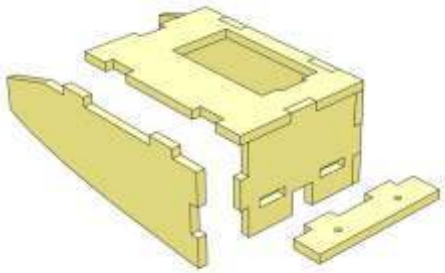

Additional servo tray for V-tail servos

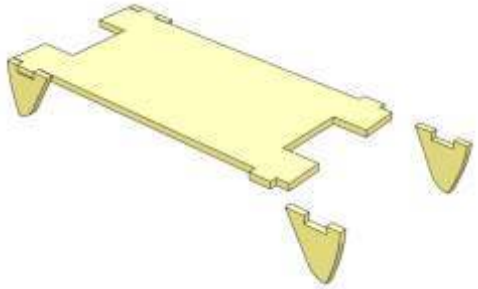

Die-cut parts

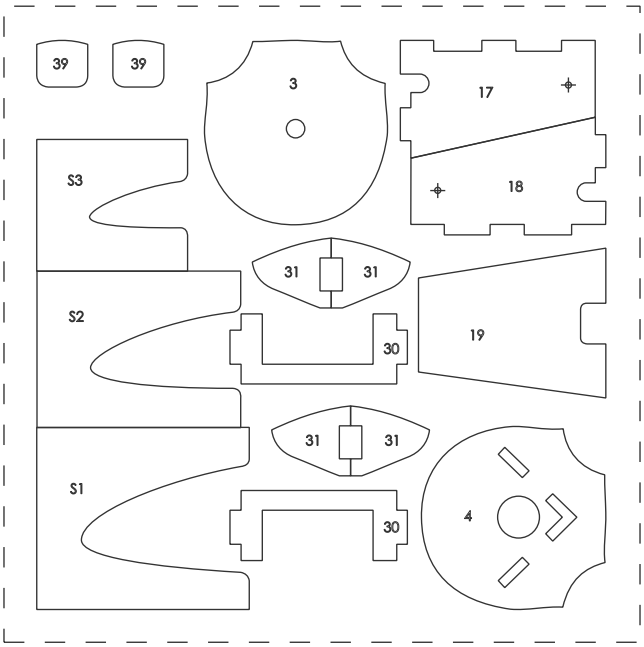

Instructions for conventional built-up wings

1

Remove any residue of the laser cutting process from ribs and spars. Arrange spar components along a straight edge and glue together: front spar T 40 + T 40.1, centre spar T 41 + T 41.1, auxiliary spar T 42 + t 42.1.
Sand joints after glue has dried.

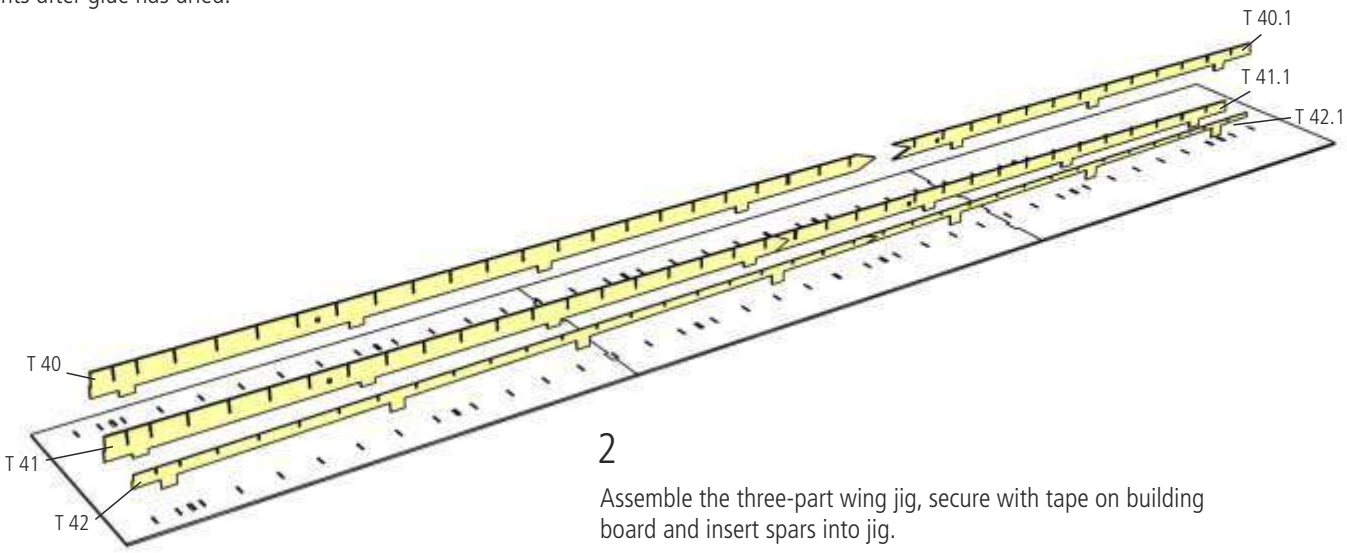

2

Assemble the three-part wing jig, secure with tape on building board and insert spars into jig.

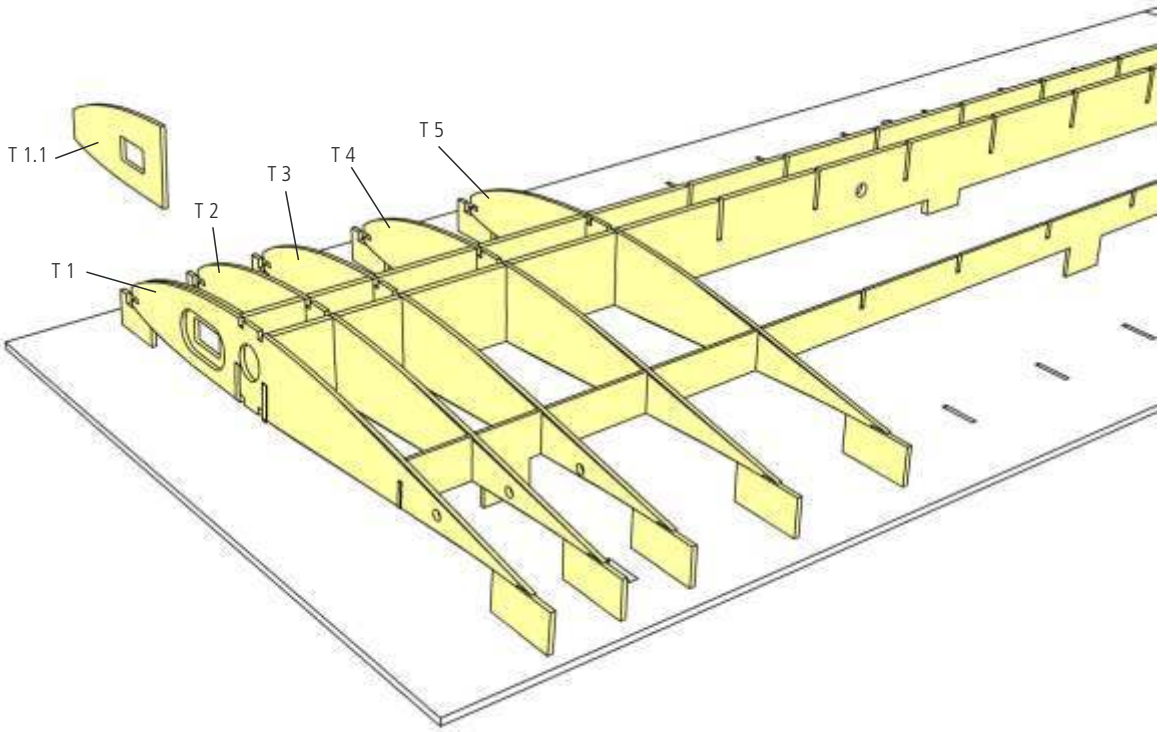

3

Glue T 1.1 to the inside of rib T 1.
Make sure ribs fit easily into spars and correct, if necessary. Then glue ribs T 1 to T 5 in place.
Please note: Rib 1 is slightly angled due to wing dihedral. Glue in place and secure to spars with tape.

4

Make sure ribs fit easily into spars and correct, if necessary. Then glue ribs T 6 to T 39 in place.

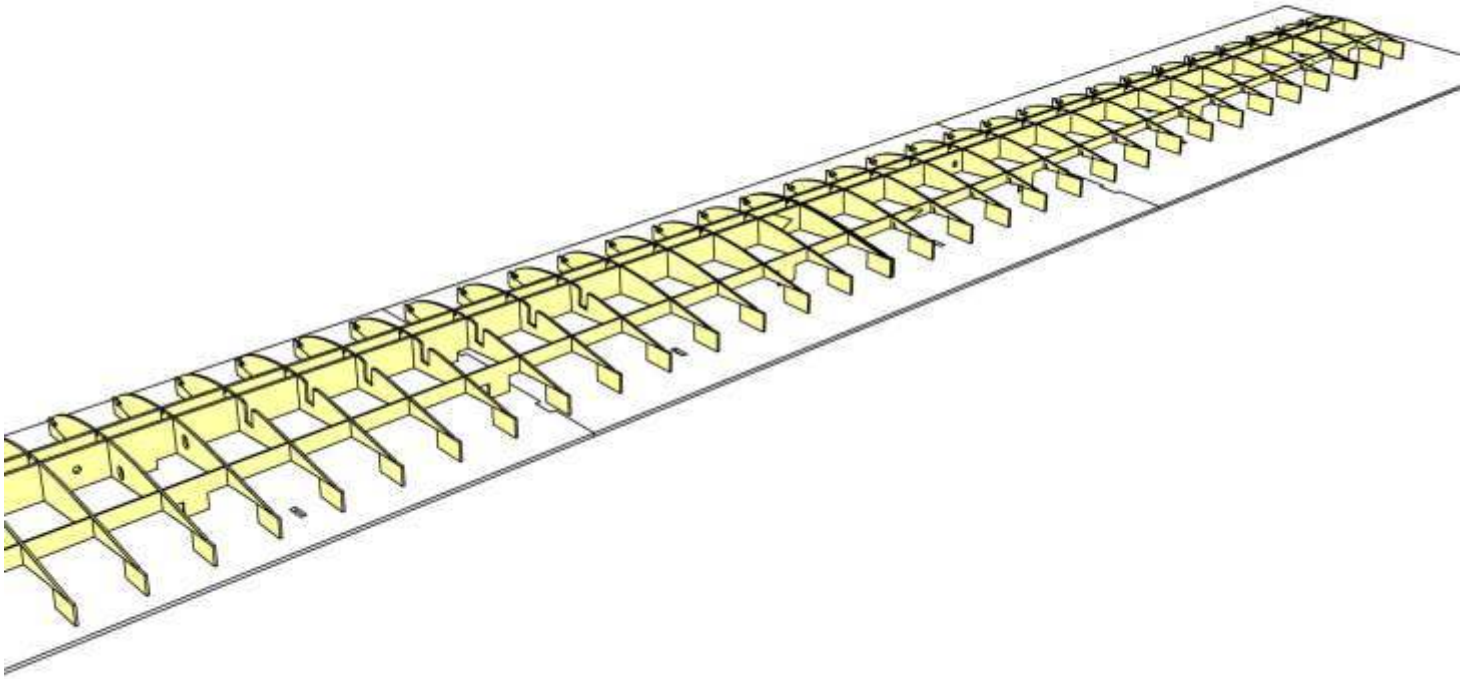

5

Cut off rear portions of doublers T 21.1 and T 22.1 as indicated, then glue doublers to ribs T 21 and T 22.

Glue doublers T 36.1 and T 37.1 to ribs T 36 and T 37 accordingly.

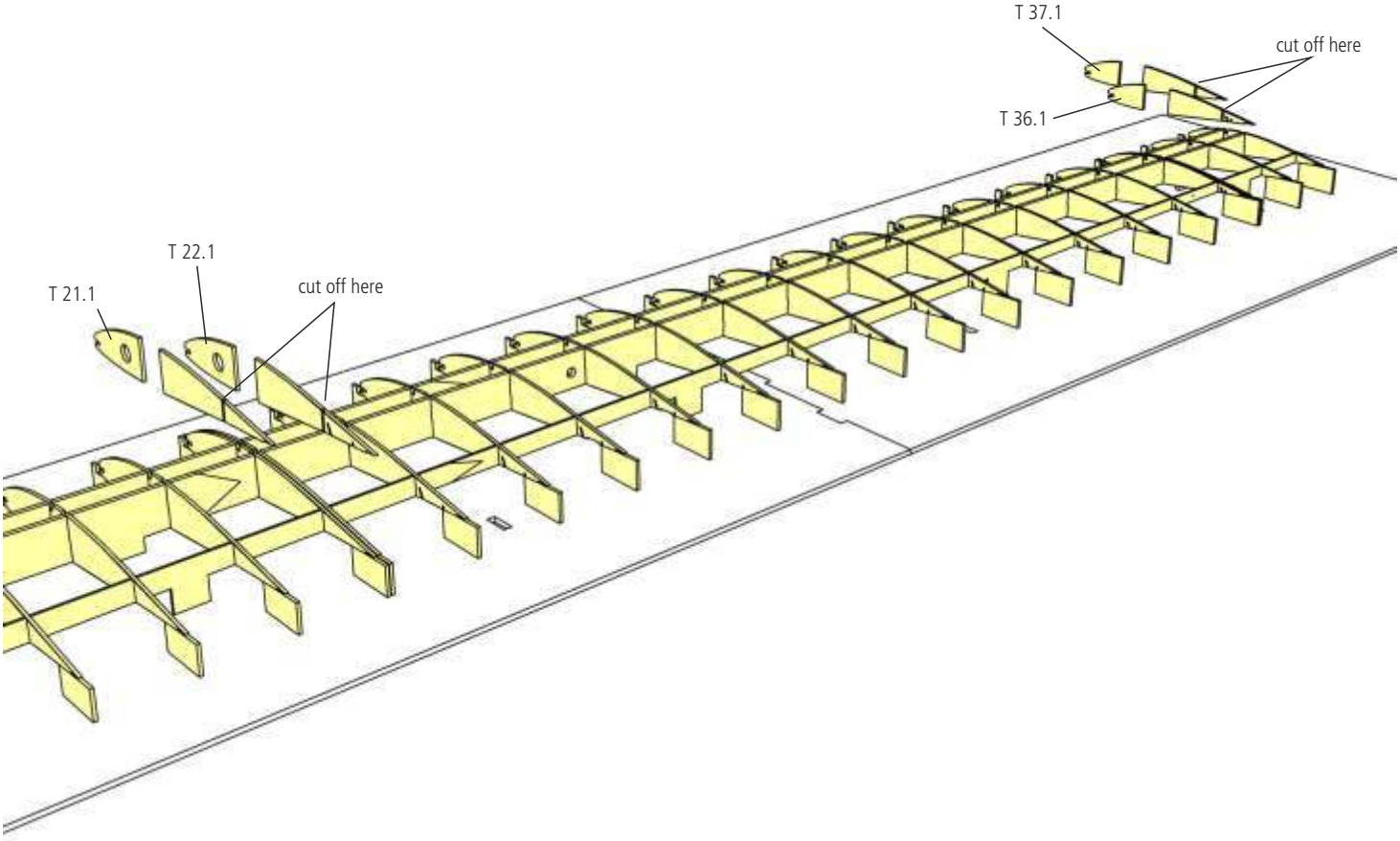

6

Splice together upper stringers T 43 (3×3 mm spruce) and leading edge reinforcement T 44 (5×2 mm spruce) over a length of at least 3 cm. Glue stringers to ribs and spars with special attention to splice. Secure with clamps. Insert T 44 into front of ribs, secure splice with a clamp.

Note: Make sure rib T 1 remains straight after T 44 is glued in place!

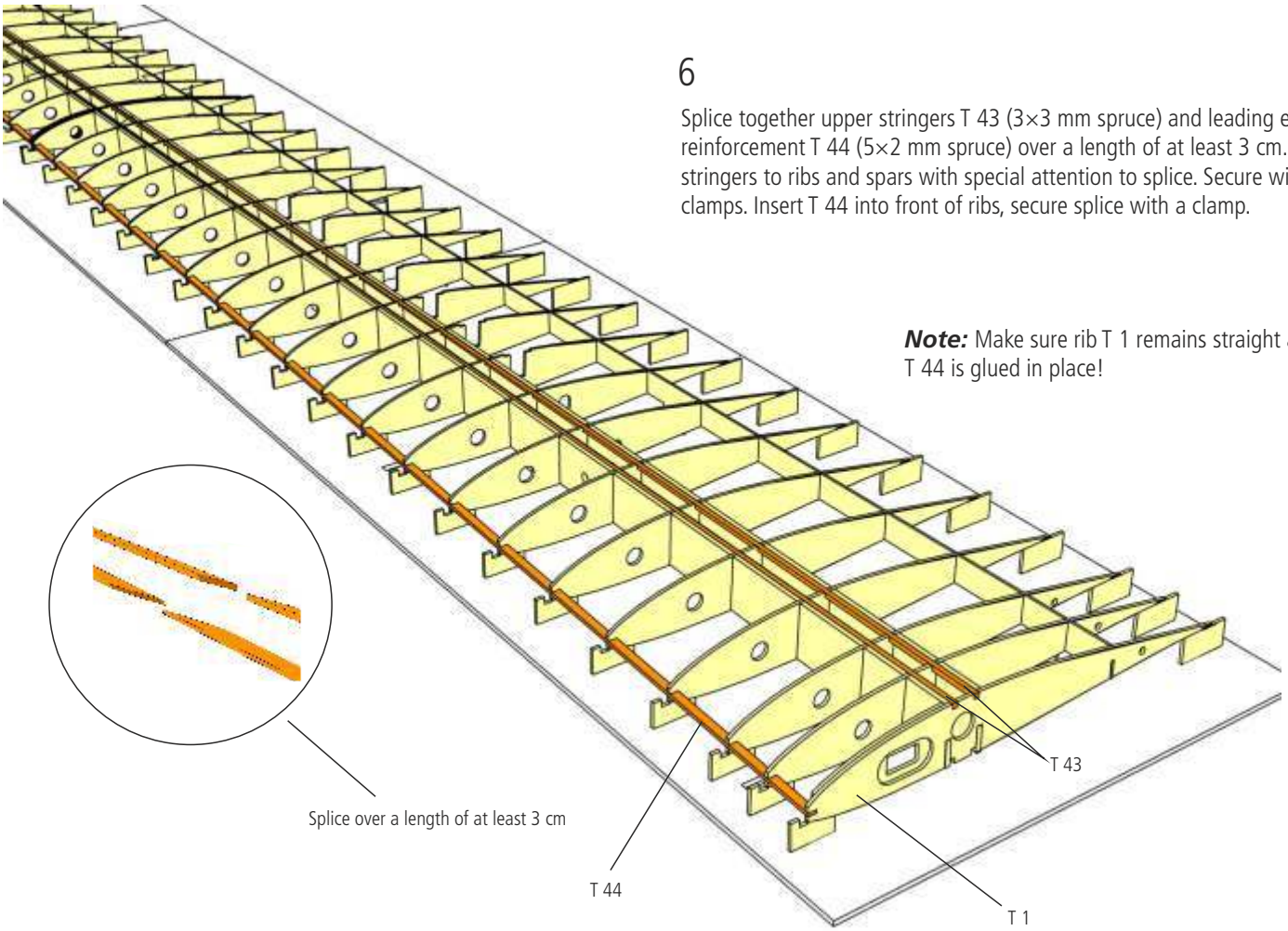

7

Glue reinforcements T 45 and T 46 to the inside of main spars beneath T 43 to reinforce spar joints.
Glue reinforcement T 47 to the front rear spar.
Note: Reinforcements are not rectangular but follow the taper of the spars. First check correct orientation, then glue.

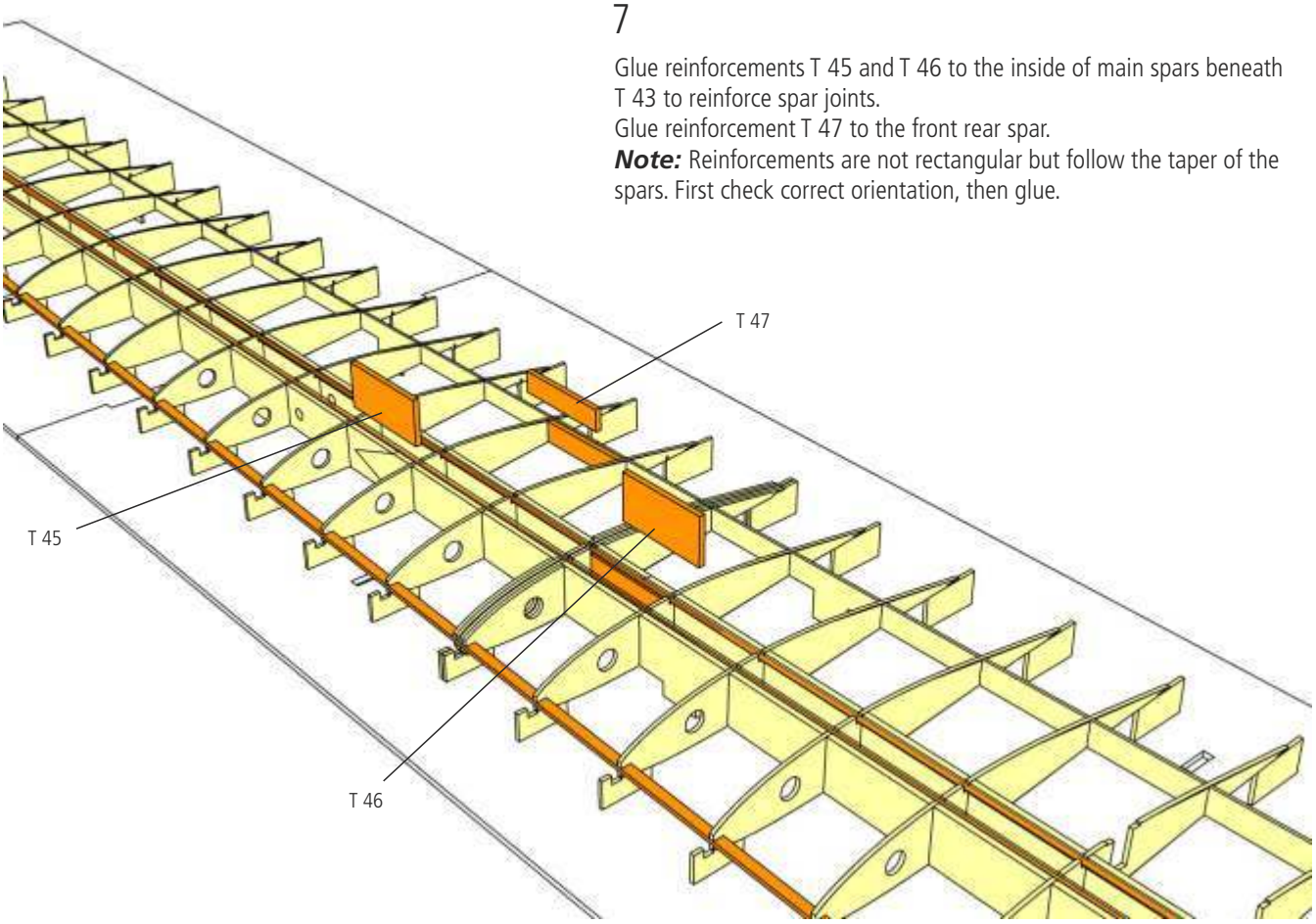

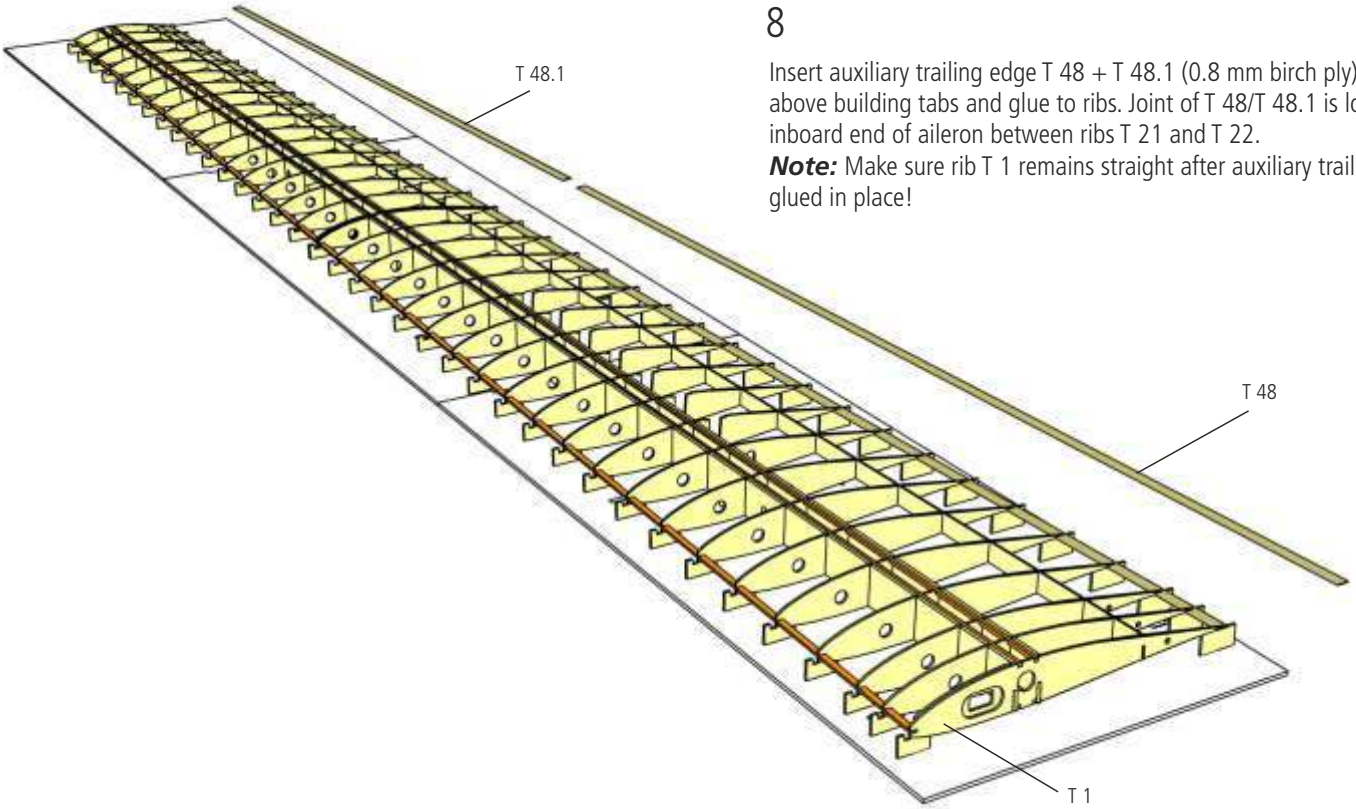

8

Insert auxiliary trailing edge T 48 + T 48.1 (0.8 mm birch ply) into slot above building tabs and glue to ribs. Joint of T 48/T 48.1 is located at the inboard end of aileron between ribs T 21 and T 22.
Note: Make sure rib T 1 remains straight after auxiliary trailing edge is glued in place!

9

Arrange false leading edge parts T 49 + T 49.1 as well as leading edge parts T 50 + T 50.1, T 51 + T 51.1 along a straight edge and glue together.

Glue false leading edge T 49/T 49.1 to front of ribs. Make sure false leading edge is in good contact with top of building tabs.

Hold false leading edge in place by inserting (but don´t glue!) leading edge parts T 50/50.1 and T 51/51.1 until glue has dried.

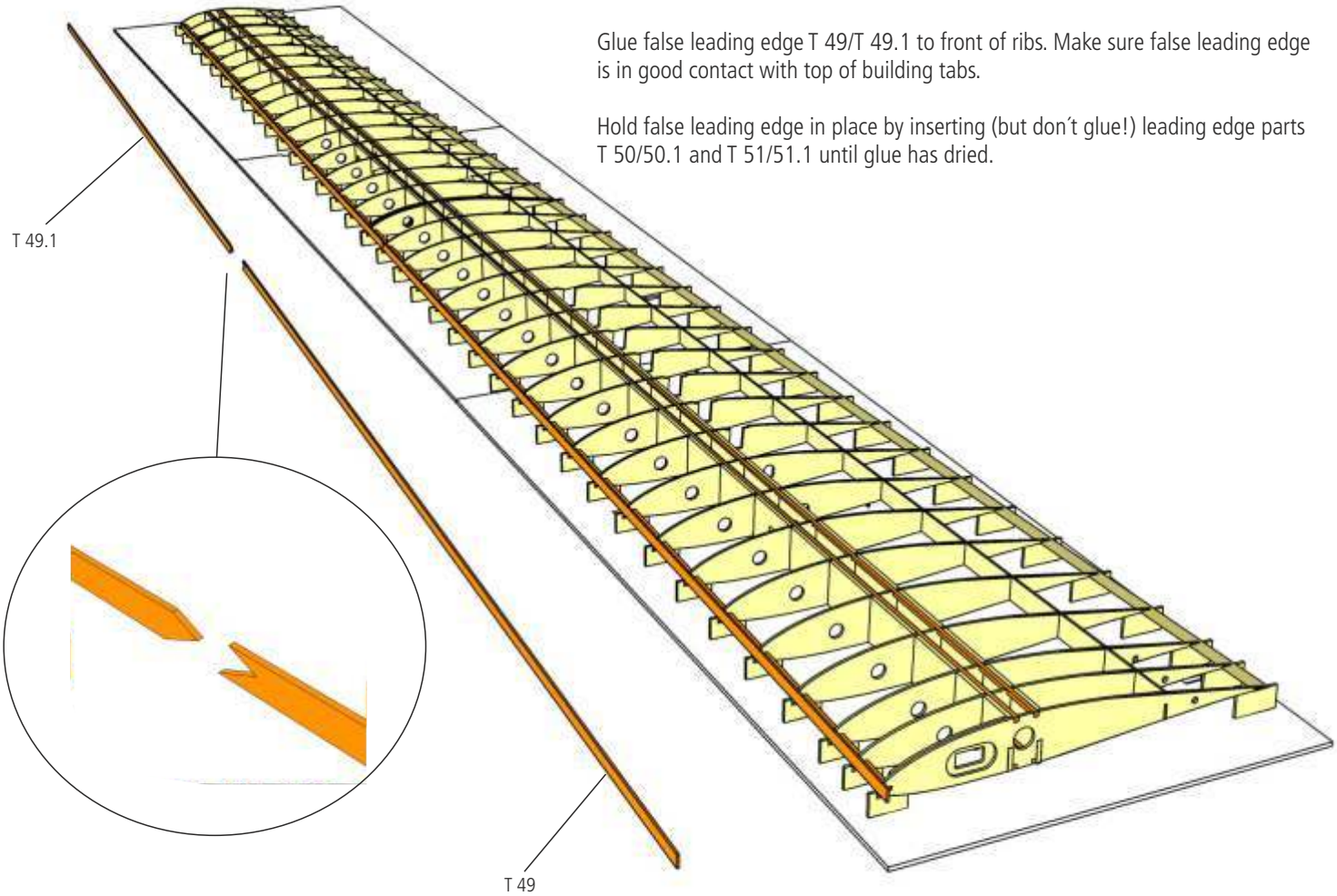

10

When glue has dried, carefully remove wing from jig. Splice together lower stringers T 43 (3×3 mm spruce) and glue in place. Also glue in place aileron leading edge T 52.

Note: The arrow on leading edge faces towards wing tip!

Put wing back into jig.

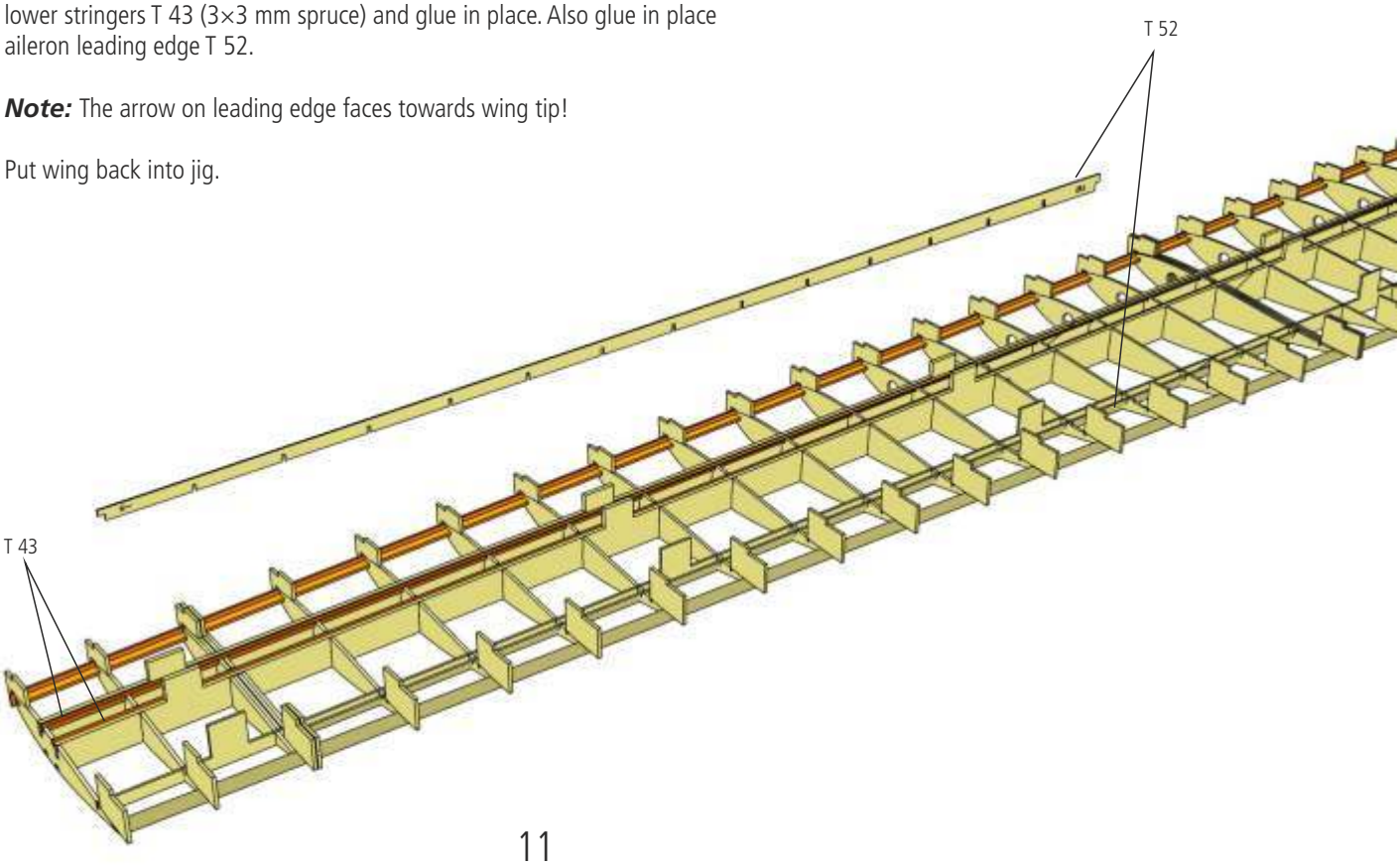

11

Slightly bevel front edge of control horn support T 53 and glue in place between ribs T 25 and T 26. Please note that hole in T 53 faces wing tip.

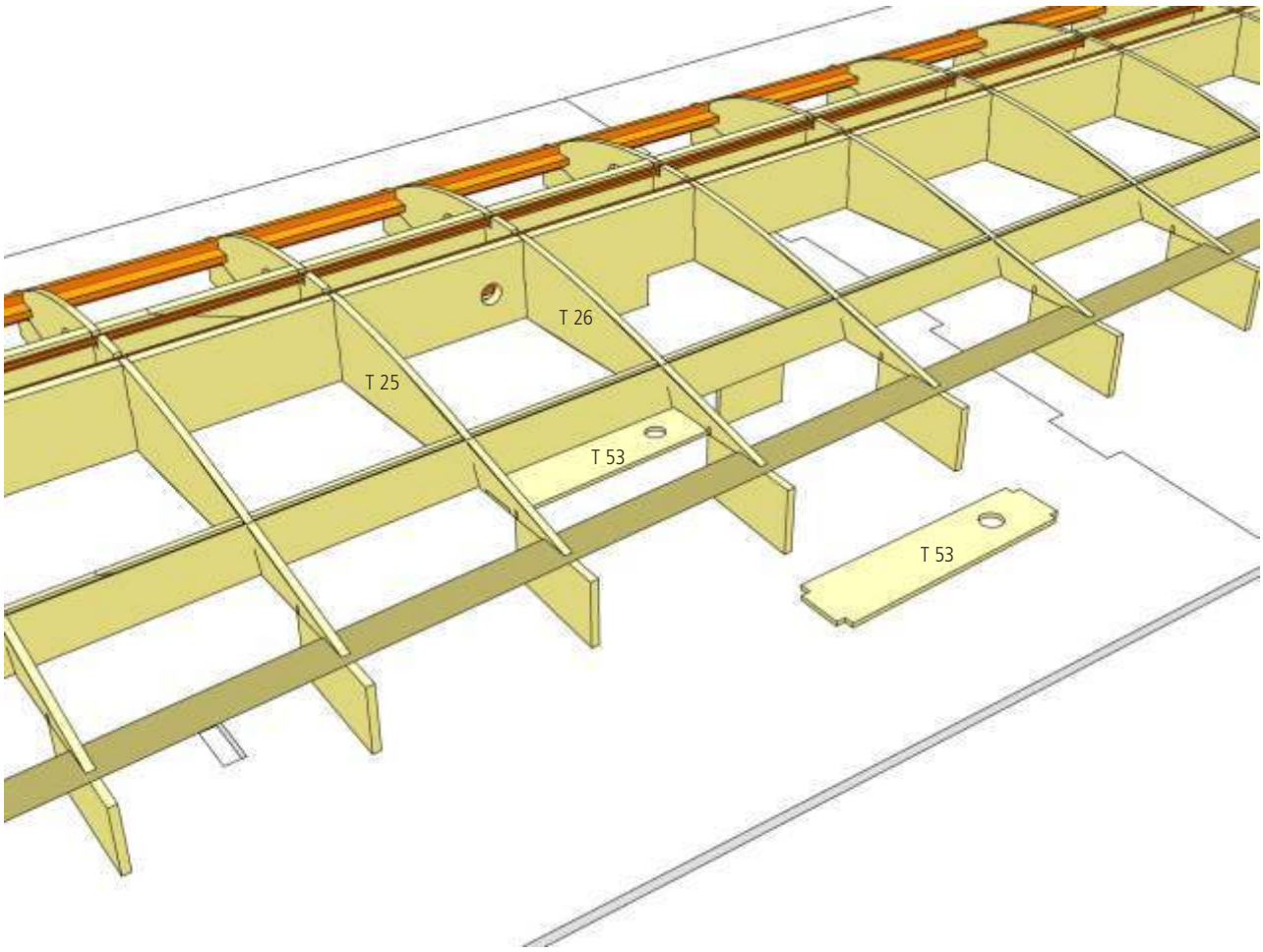

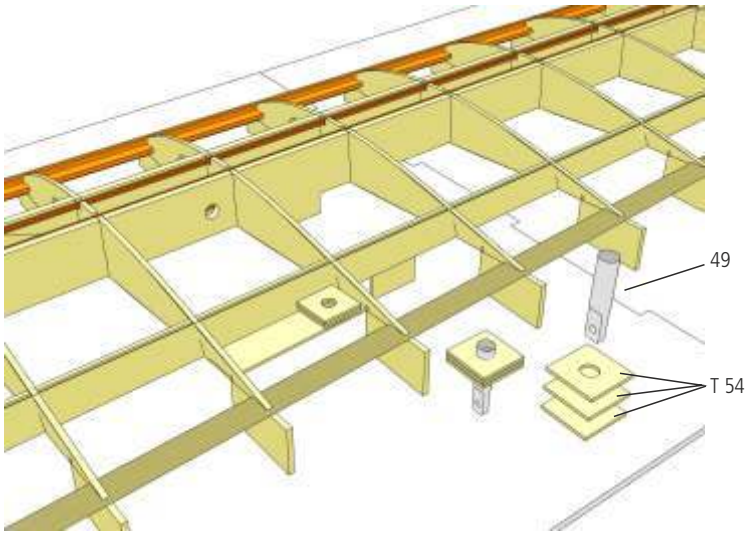

12

Glue together 3 control horn supports T 54, slide over control horn 49 and leave to dry.
When dry, bevel front side of supports to fit angle of aileron leading edge. Then glue supports to T 53.

Note: Make sure holes in supports T 53 and T 54 are aligned.

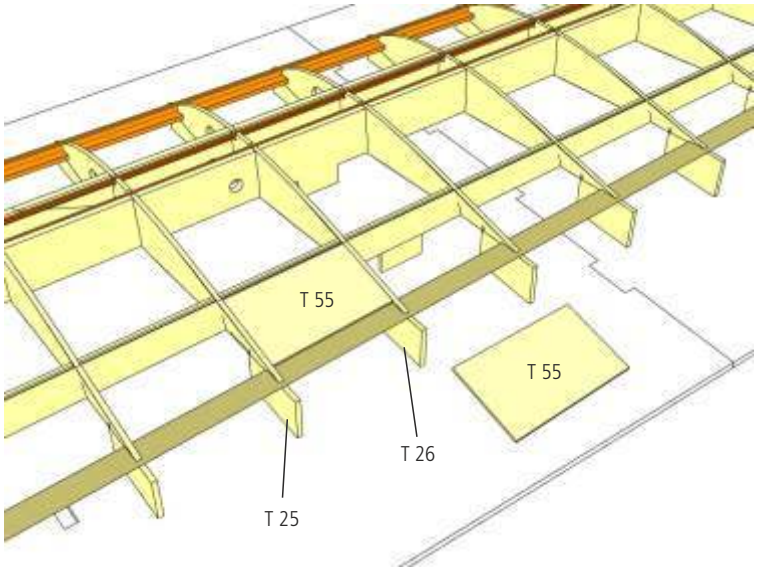

13

Slightly bevel front edge of reinforcement T 55 and glue in place flush with top of ribs T 25 and T 26.

14

Glue servo trays T 56 (between ribs T 7 and T 8) and T 57 (between ribs T 24 and T 25) to back of spar T 41 and flush with top of ribs.

You can do that now or after top wing sheeting is glued in place.

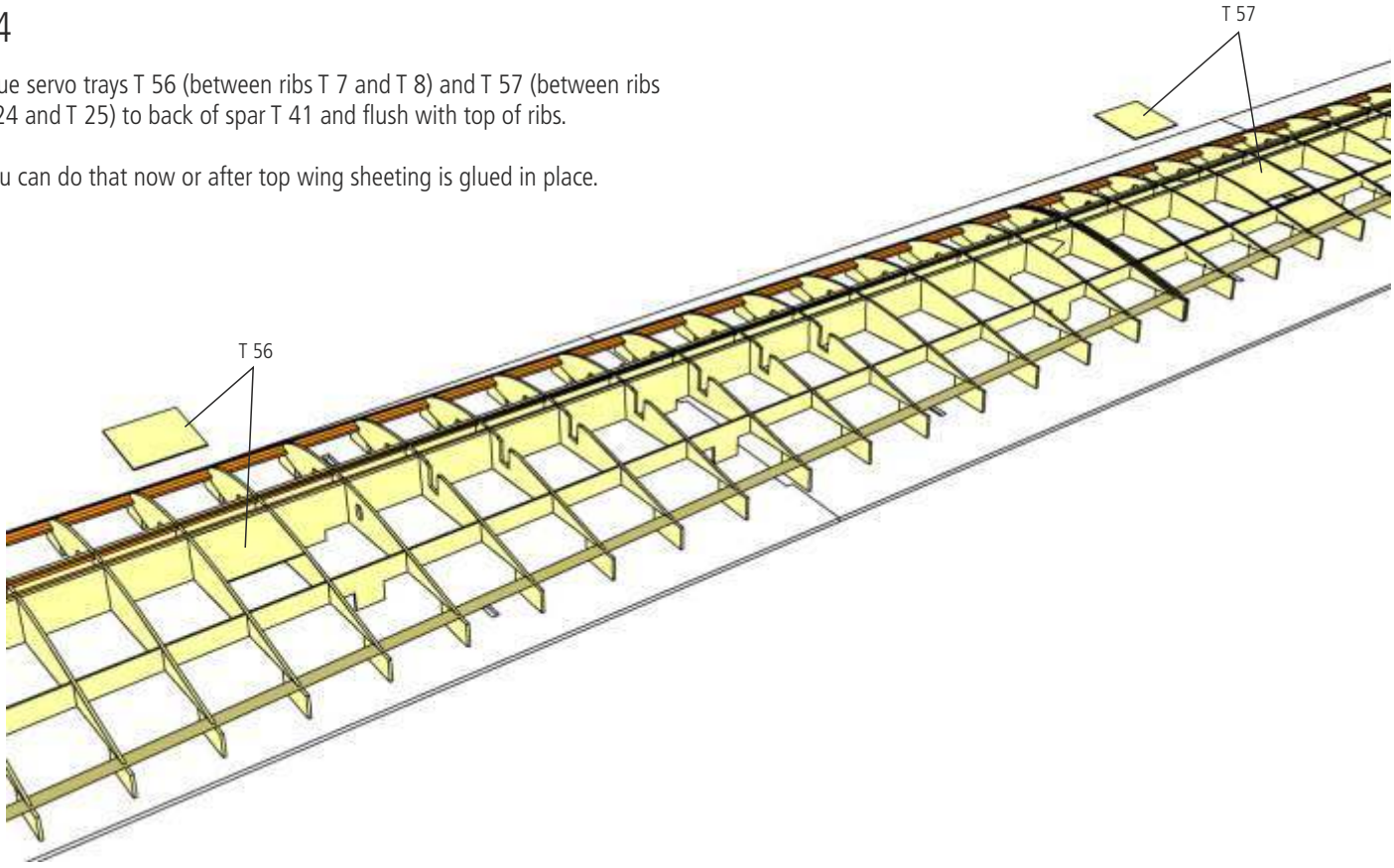

15

Use top wing sheeting as a guide to find correct position for spoiler. To do this, remove cappping for spoiler from top wing sheeting T 61 and align wing sheeting along contact surface of ribs T 21 and T 22.
Glue in place spoiler 47 in ribs T 10 to T 16, flush with upper rib contour (5-min.-Epoxy).

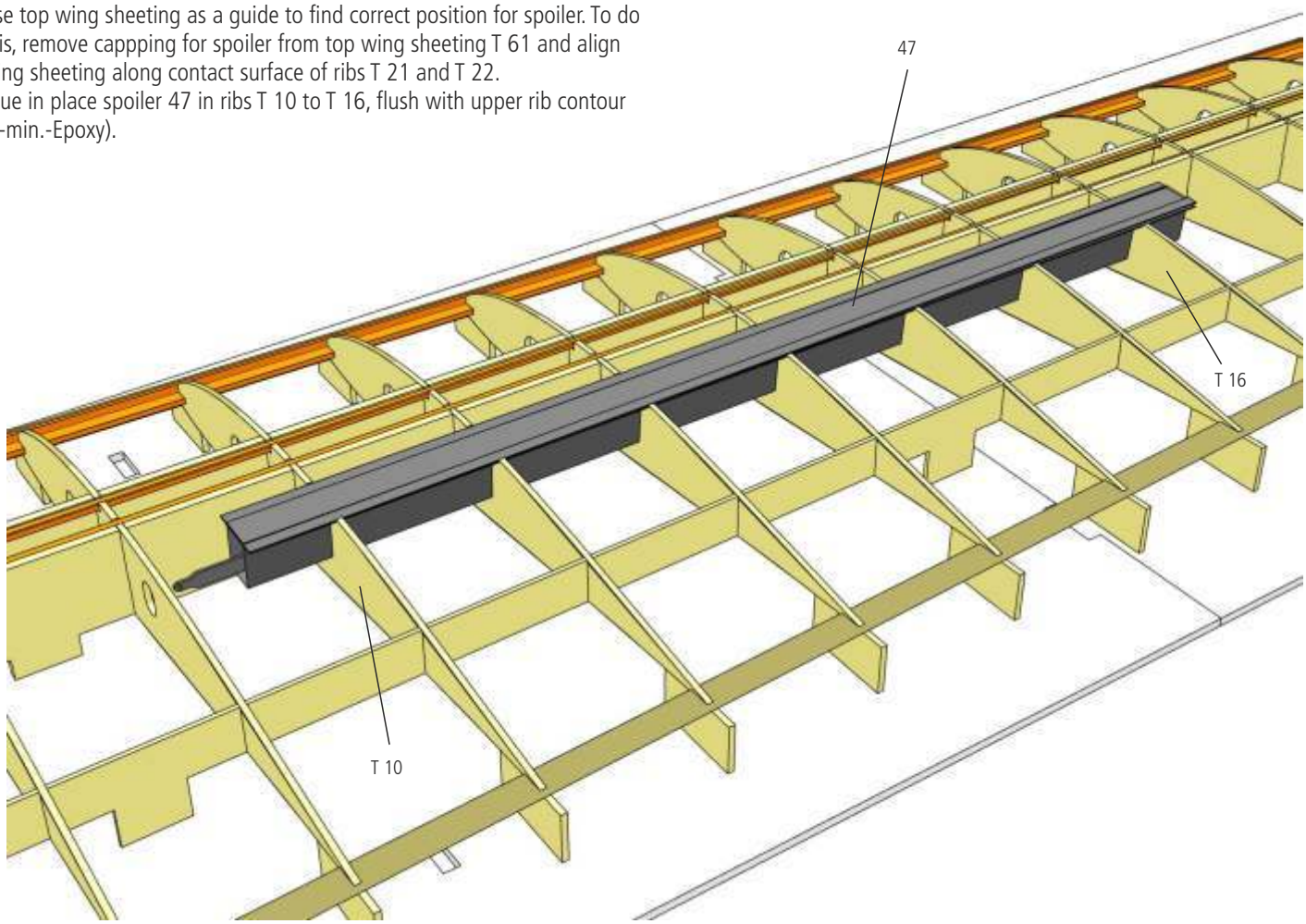

16

Use epoxy to glue wing joiner sleeves T 58 and T 59 into root ribs.

Note: Sleeves must be flush with rib T 0 on completed wing. So temporarily add rib T 0 to find correct position for sleeves. T 0 will be glued in place after sheeting has been completed.

Glue T 60 to inside of sleeve T 58 as an end stop for wing joiner.

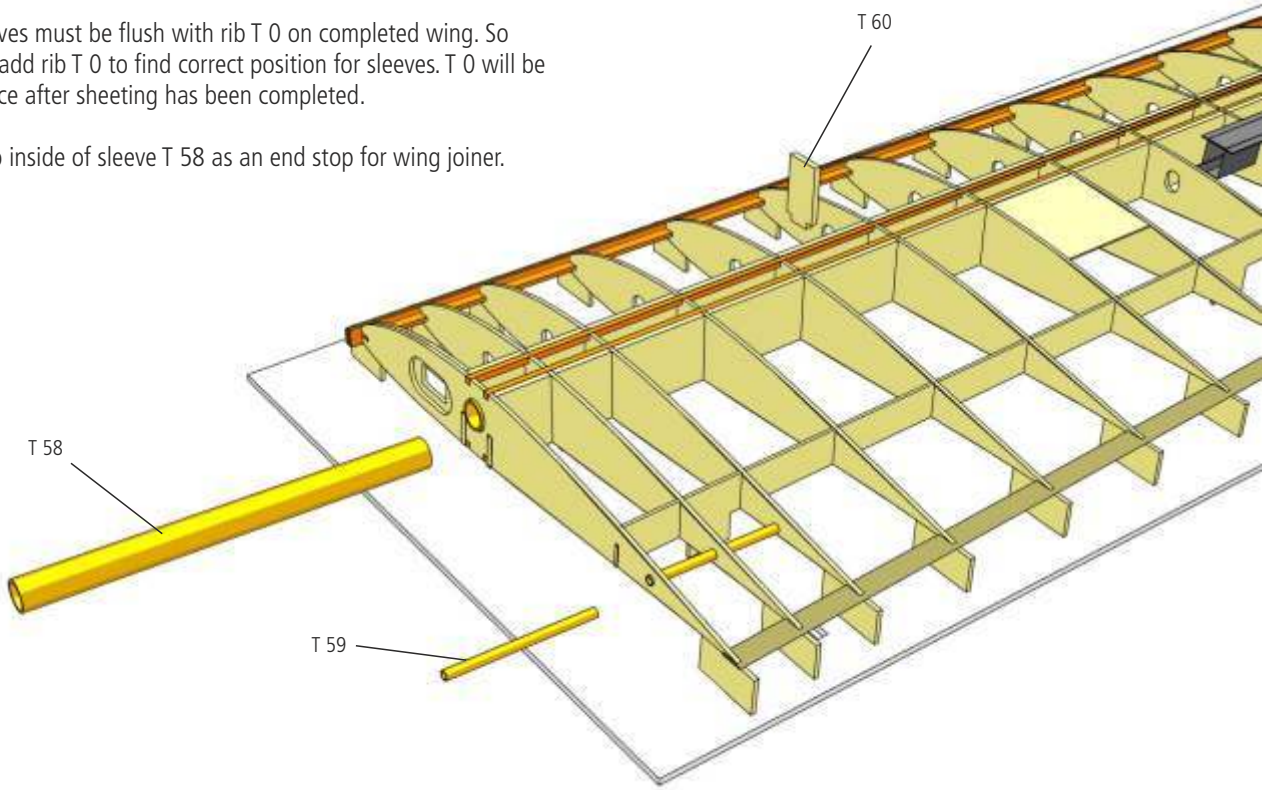

17

Sand top surface of spars around sleeve and seal with tape. Remove wing from jig, turn upside down and fill in the space around sleeve between ribs and spars with slow epoxy and chopped glas fibre strands.

Note: This can also be done after top wing sheeting has been glued in place.

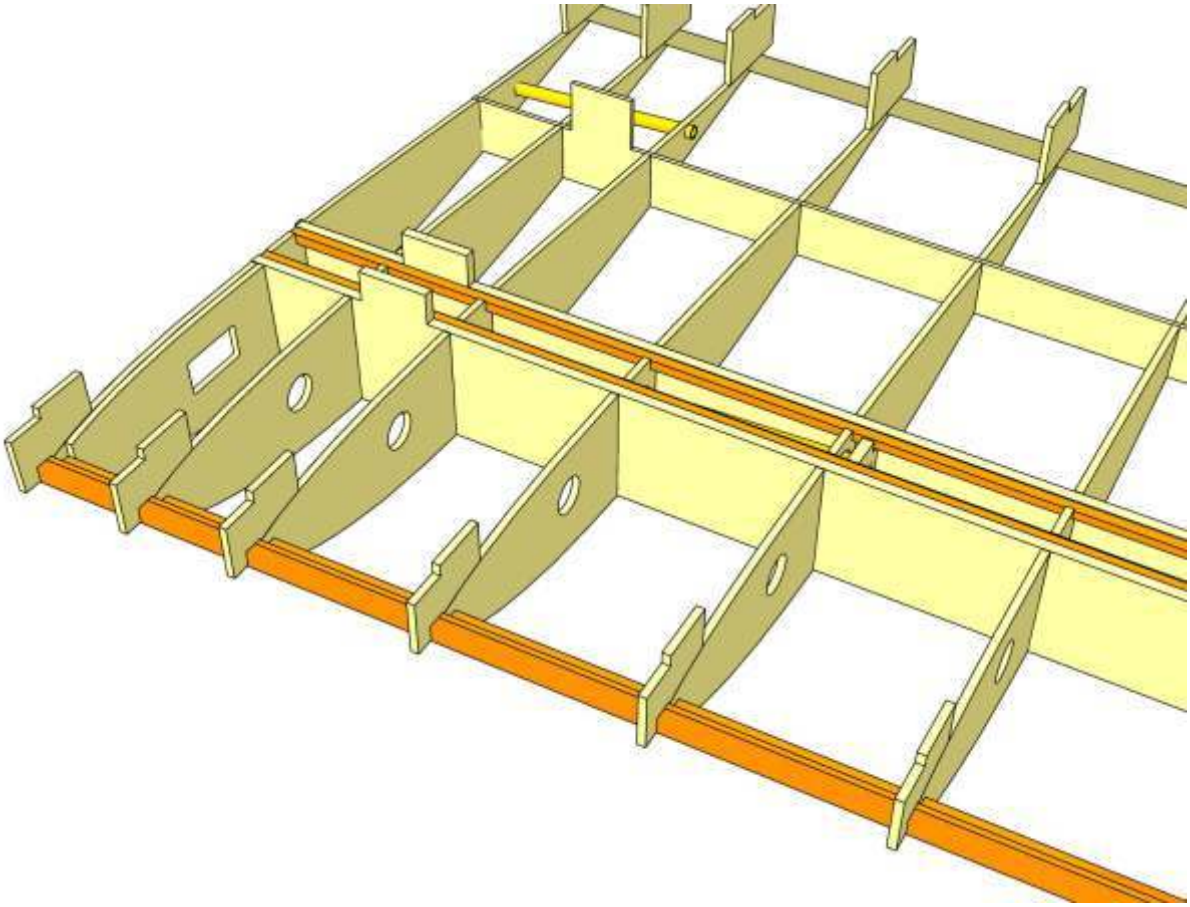

18

Insert wing in jig and carfully sand top surface of wing ribs and spars with special attention to false leading edge, which must be flush with front of ribs.
Position inner wing sheeting T 61 on wing and precisely align with contact surface of ribs T 21 and T 22 as well as spoiler position.

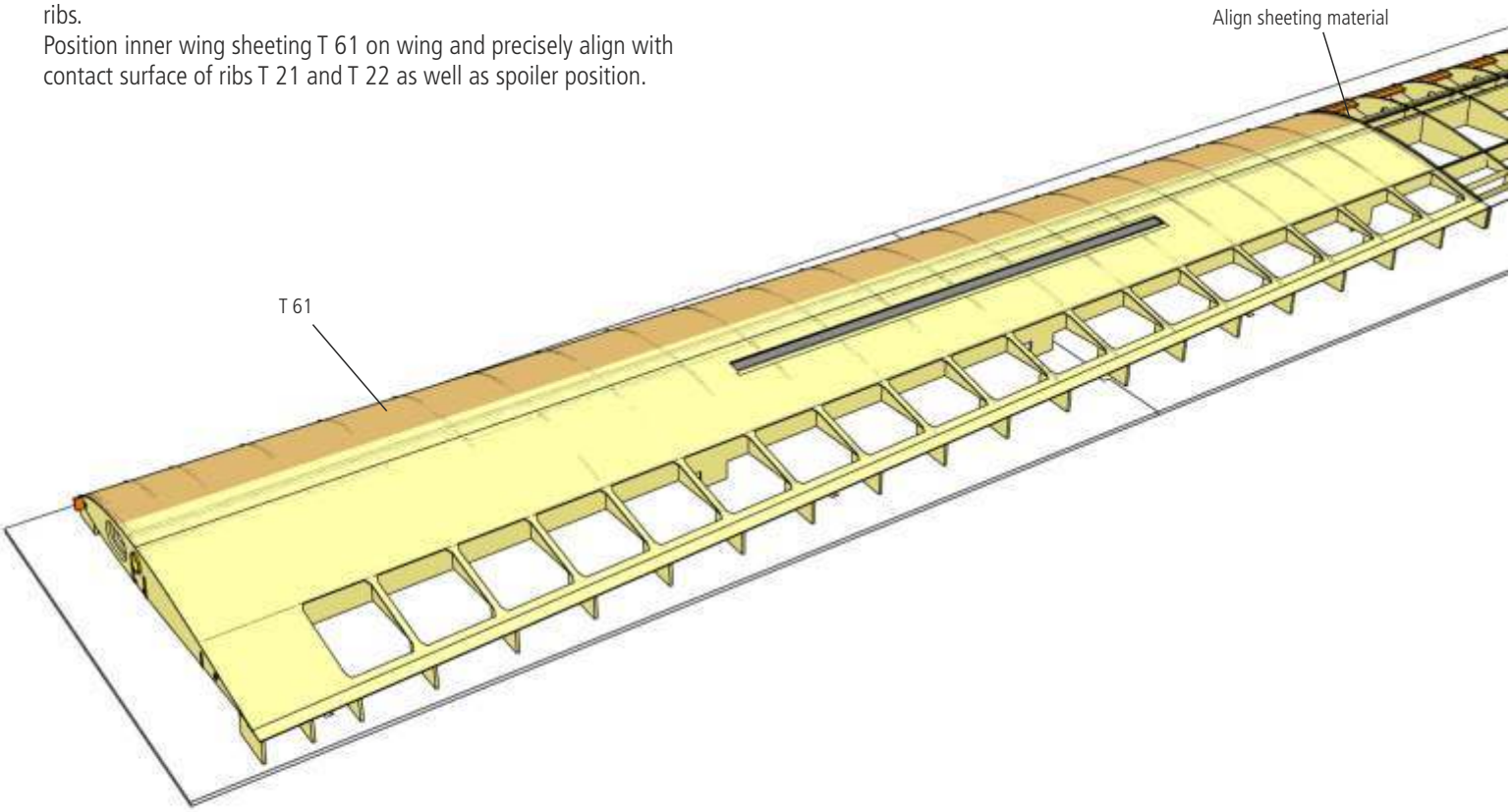

19

Secure sheeting material with tape at both ends, apply glue to false leading edge and first 10 mm of each rib, position suitable stripwood over front edge of sheeting material and press sheeting material against false leading edge and ribs with clamps and tape.

When dry, glue top sheeting to ribs, spars and false trailing edge. Again use suitable stripwood to hold down sheeting material, especially over spars.

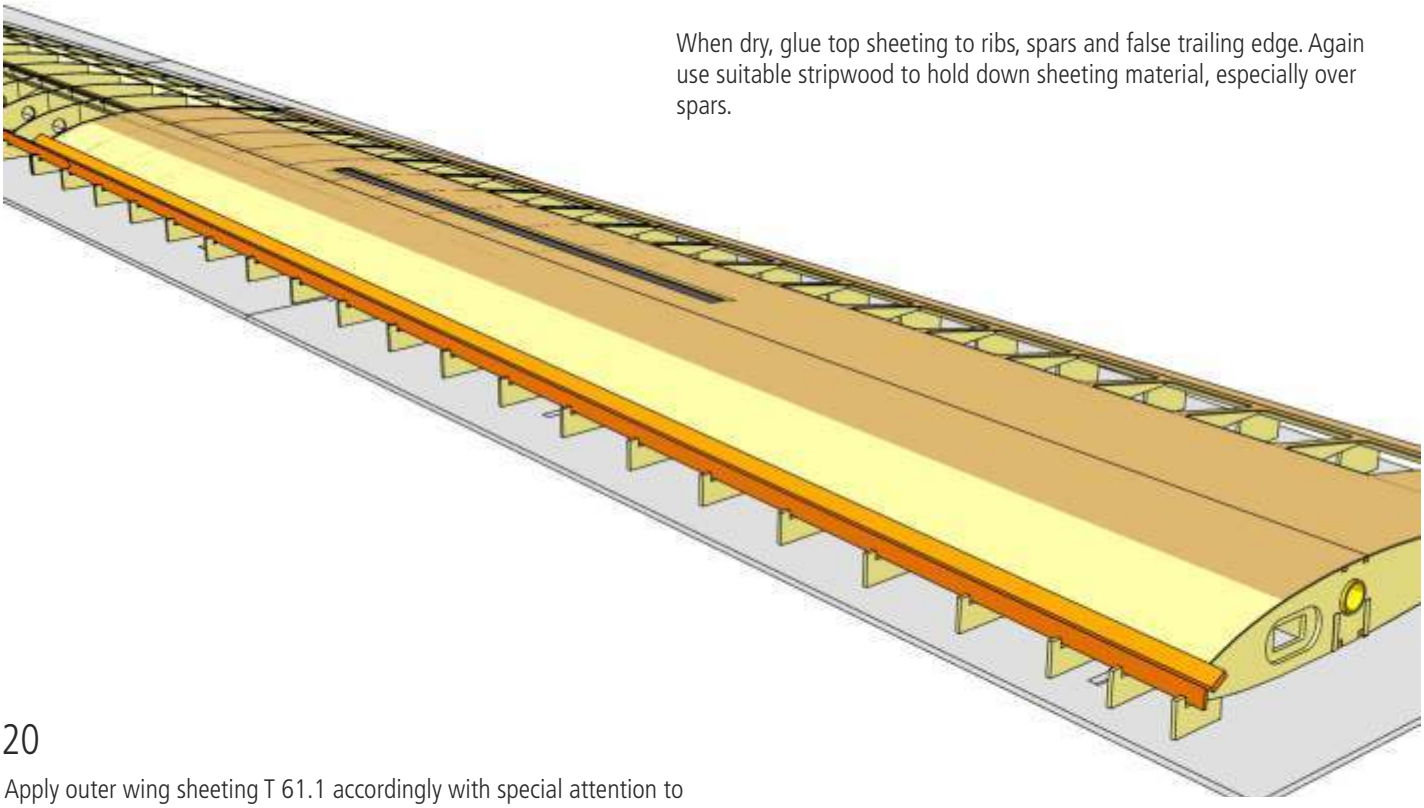

20

Apply outer wing sheeting T 61.1 accordingly with special attention to aileron position.

Note: To position the sheeting material more accurately, you can remove the aileron top sheeting from the sheeting material and add this at a later stage.

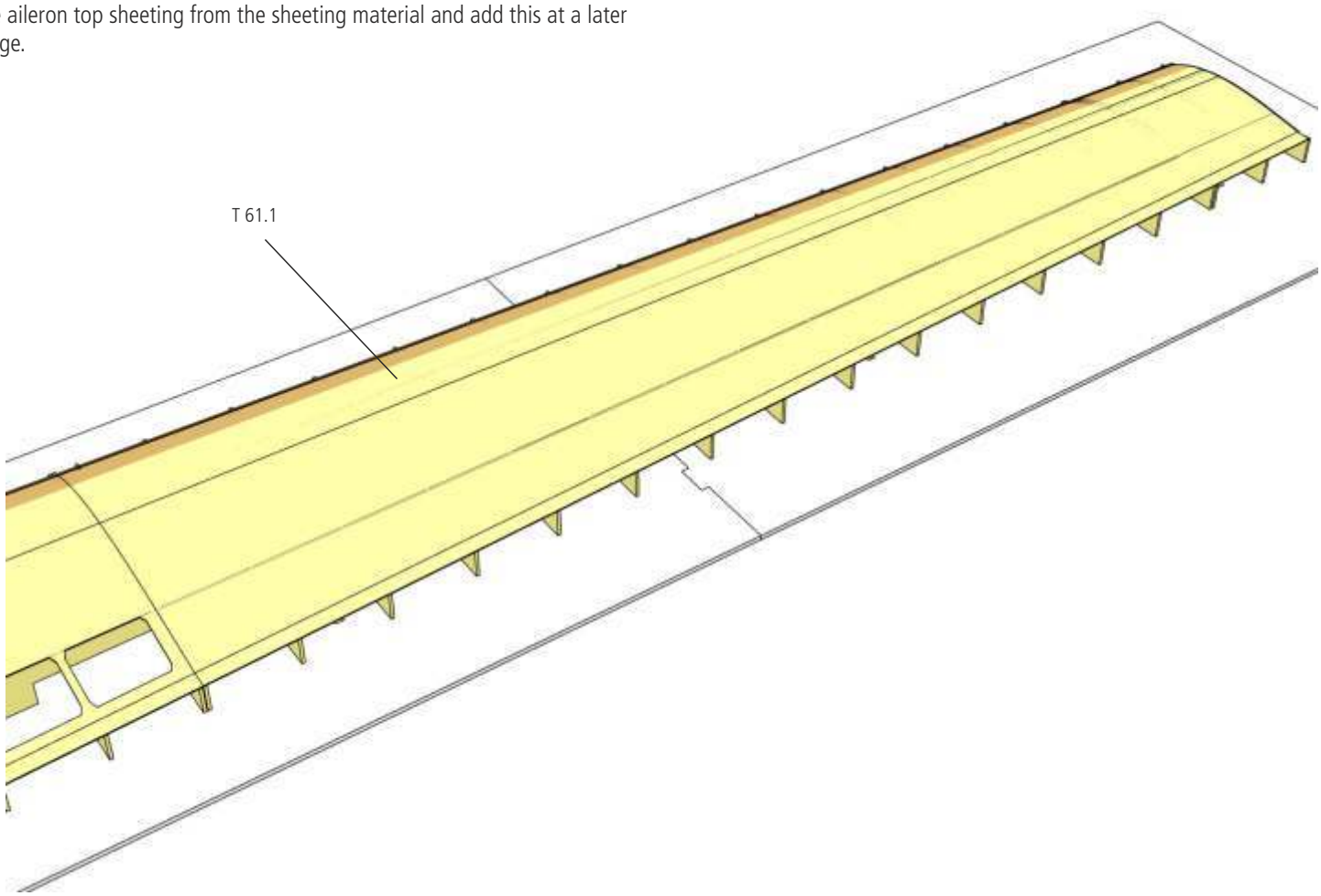

21

Remove wing from jig and turn upside down. If not already done, glue in place servo trays T 56 (between ribs 7 and 8) and T 57 (between ribs 24 and 25) (see instructions above).

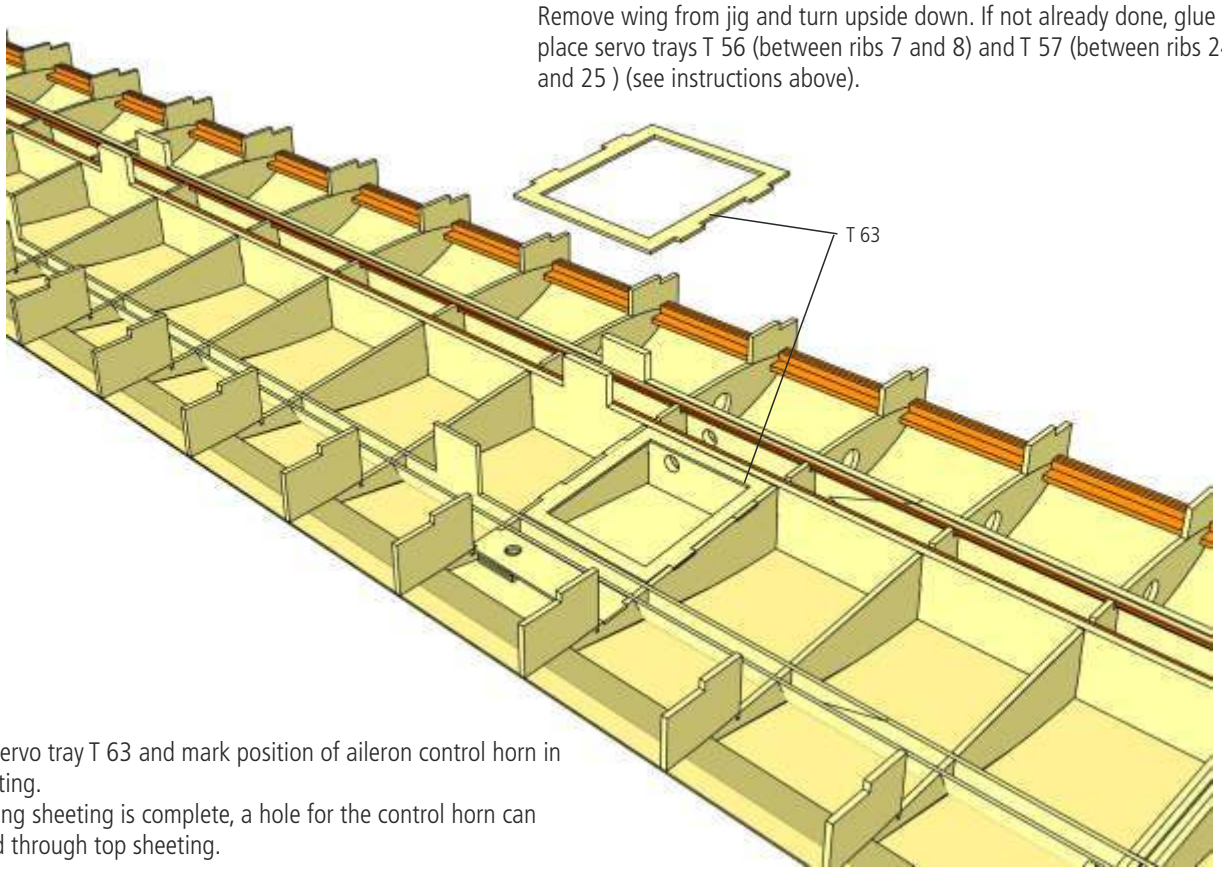

22

Glue in servo tray T 63 and mark position of aileron control horn in top sheeting.
When wing sheeting is complete, a hole for the control horn can be drilled through top sheeting.

23

Cut off building tabs from spars and ribs with a razor saw and carefully sand ribs and spars.

Glue in place aileron spar T 64.

Note: Arrow on spar faces wing tip.

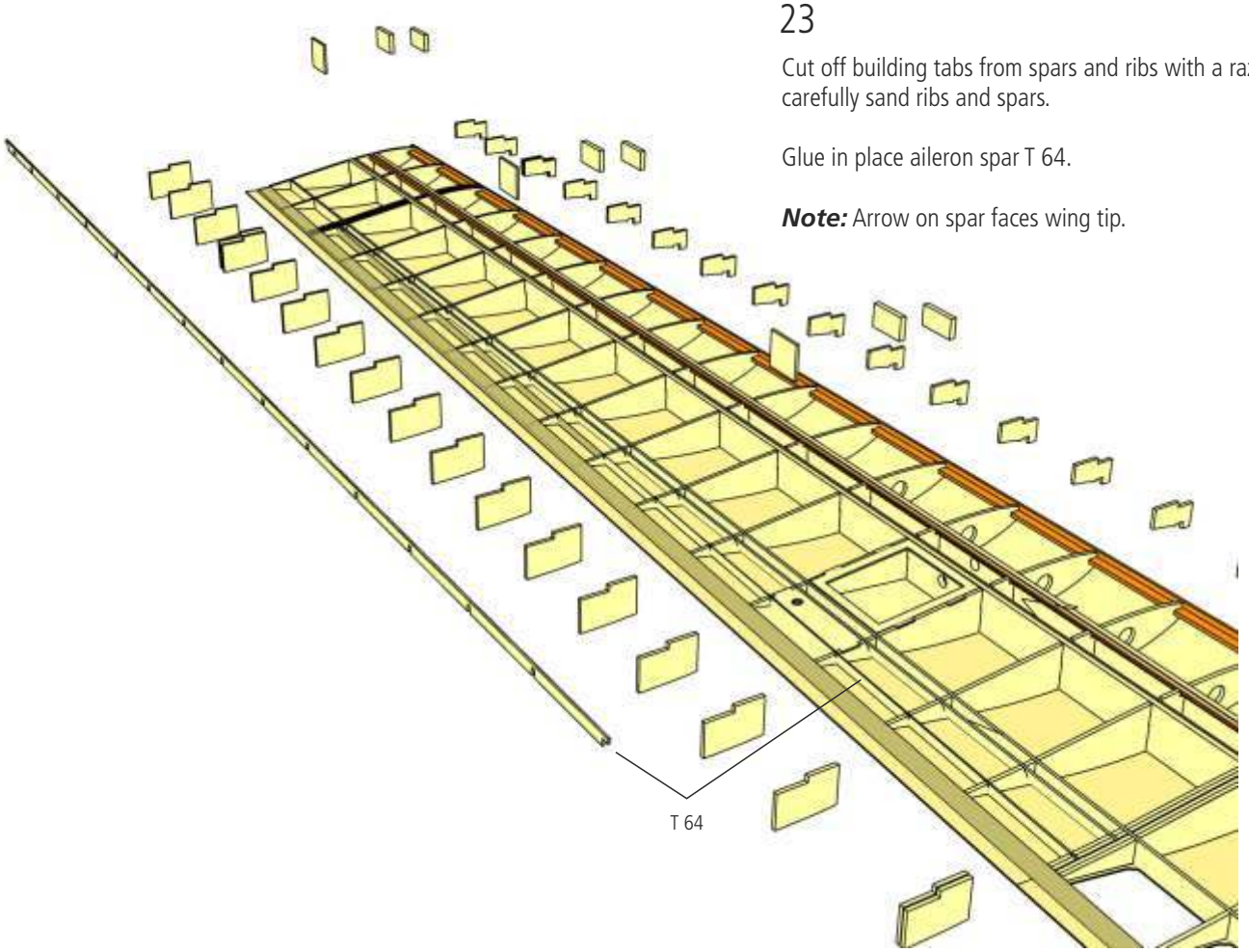

24

Install servos and servo leads.

Install spoiler pushrod as shown and check proper function. Pushrod must move freely and without binding.

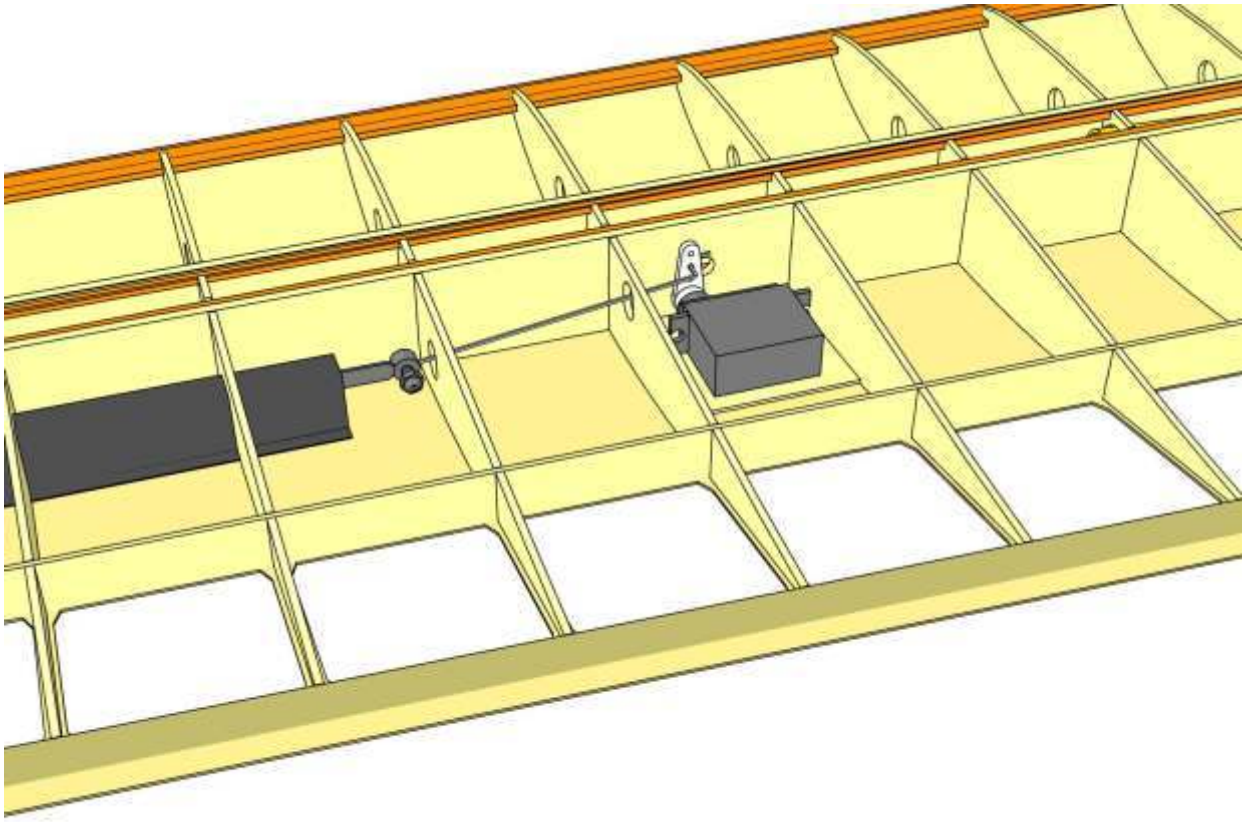

25

Temporarily install aileron pushrod to determine correct servo position. Then remove pushrod and control horn.

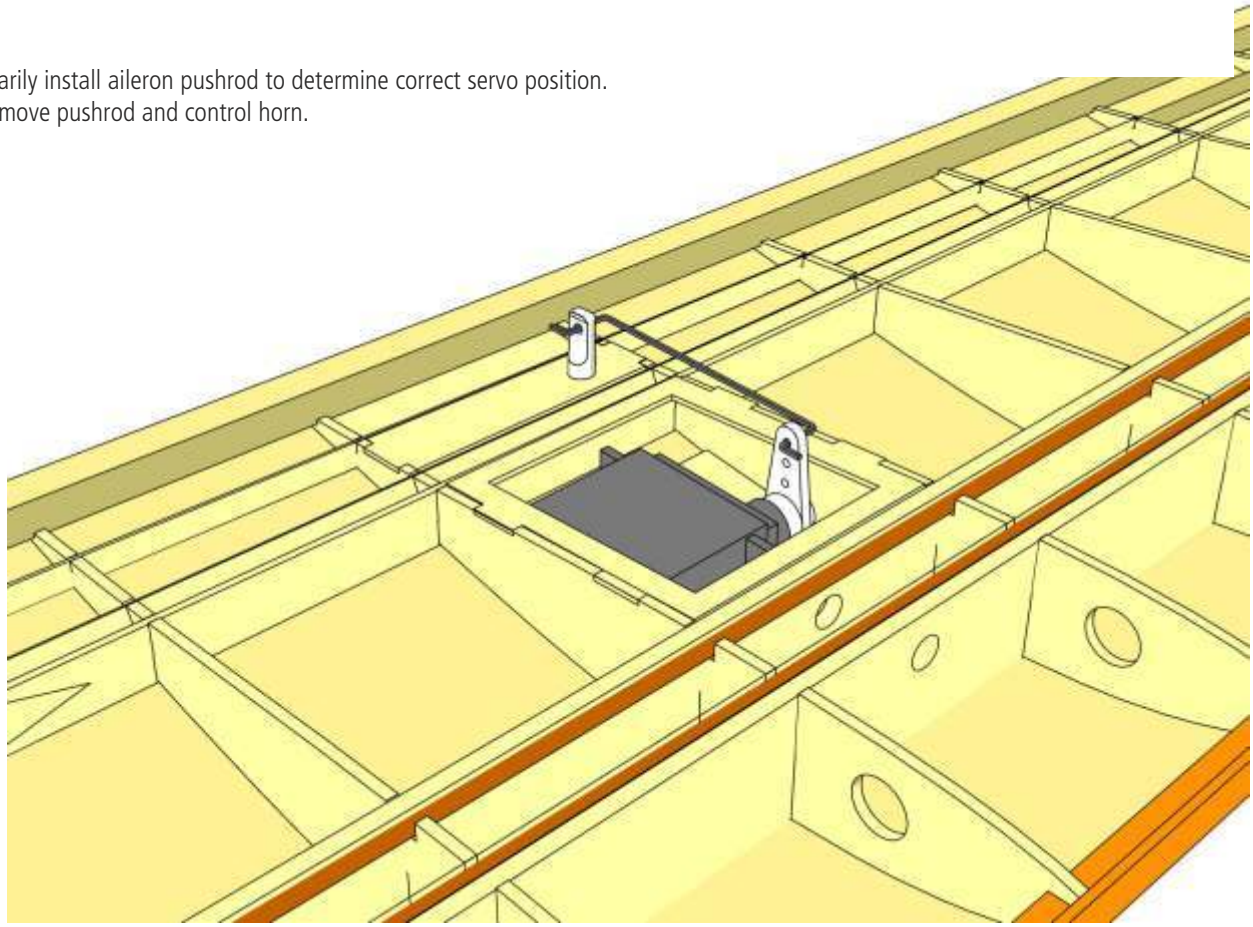

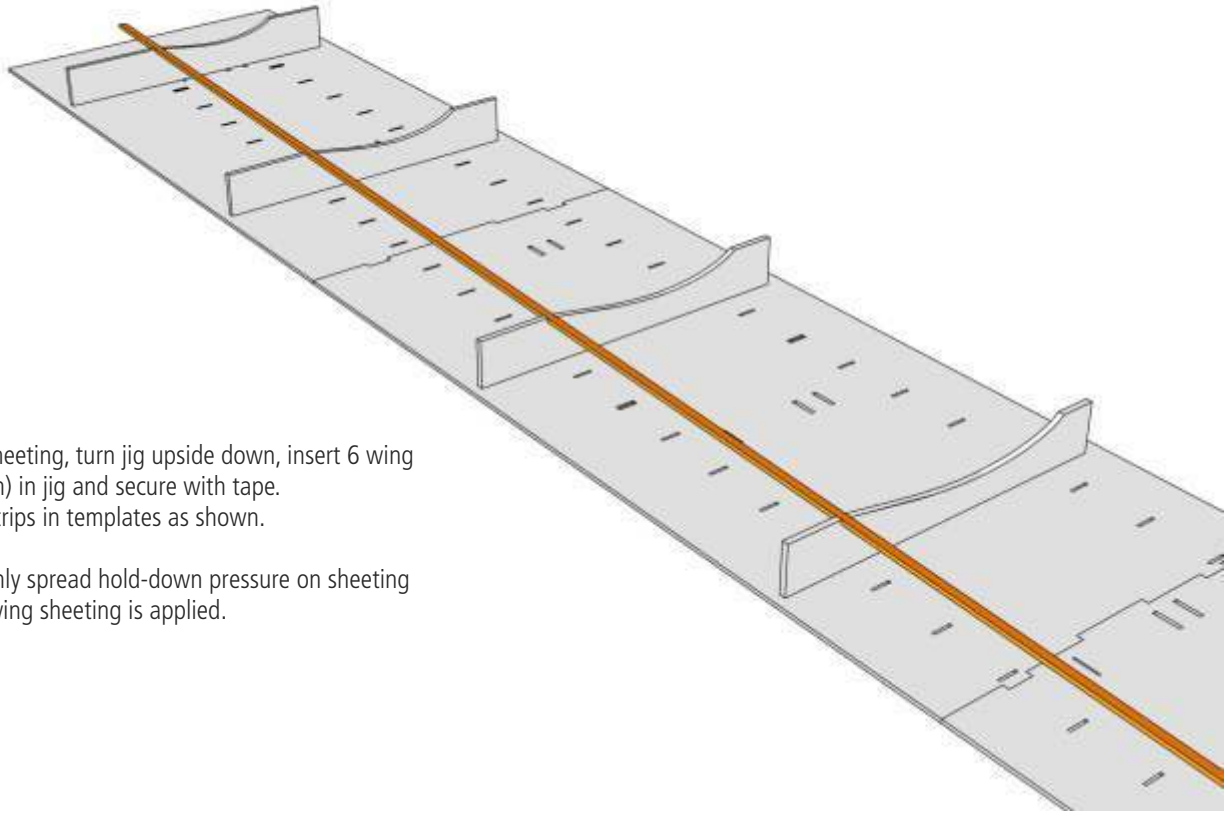

26

To apply bottom wing sheeting, turn jig upside down, insert 6 wing templates (6 mm Depron) in jig and secure with tape.
Insert 3×8 mm spruce strips in templates as shown.

Use spruce strips to evenly spread hold-down pressure on sheeting material when bottom wing sheeting is applied.

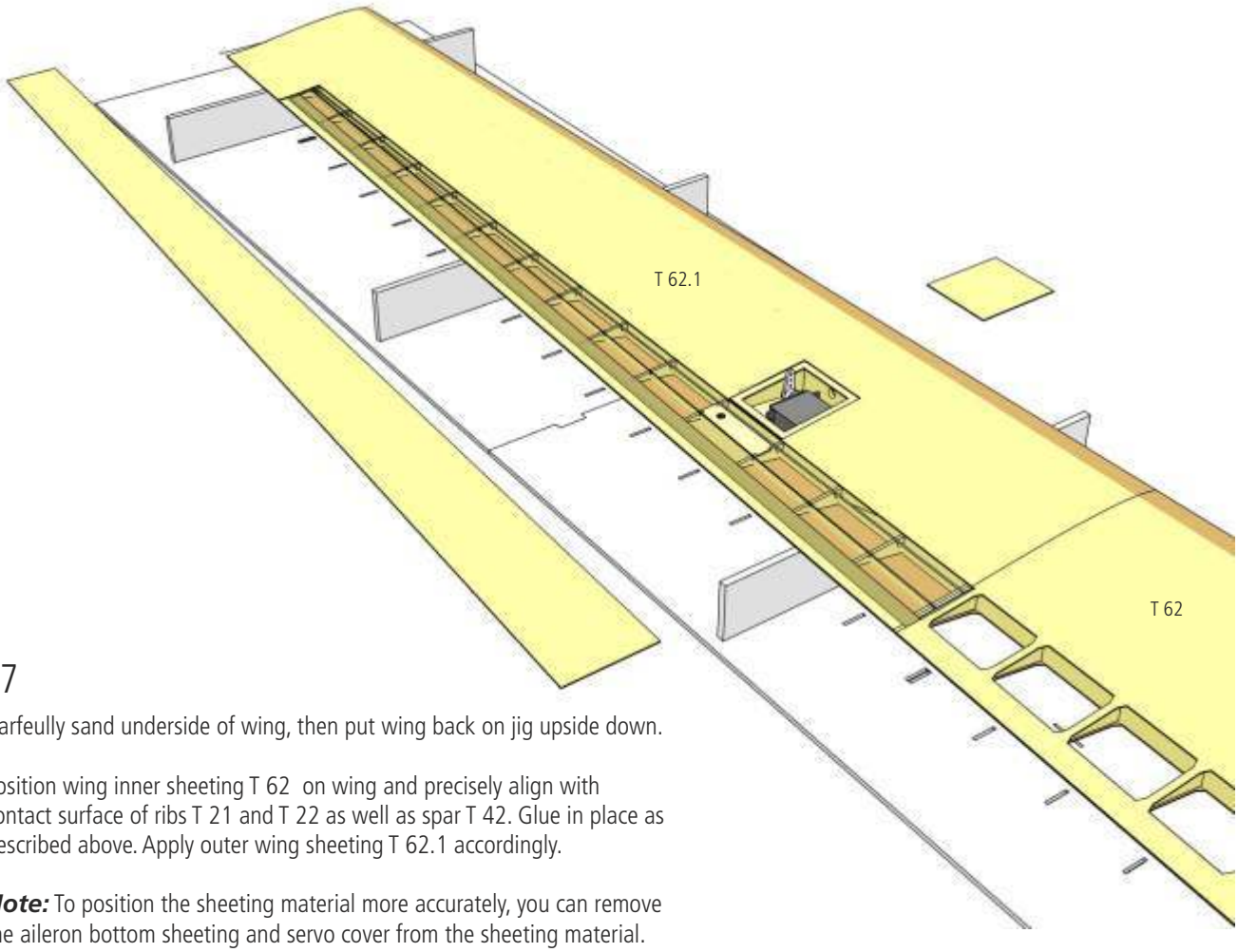

27

Carfeully sand underside of wing, then put wing back on jig upside down.

Position wing inner sheeting T 62 on wing and precisely align with contact surface of ribs T 21 and T 22 as well as spar T 42. Glue in place as described above. Apply outer wing sheeting T 62.1 accordingly.

Note: To position the sheeting material more accurately, you can remove the aileron bottom sheeting and servo cover from the sheeting material.

28

Remove wing from jig. Use mark on top sheeting to drill hole for aileron control horn 49.

Cut control horn to suitable length (see construction drawing) and bevel top side of control horn, so that control horn is flush with sheeting material when installled.

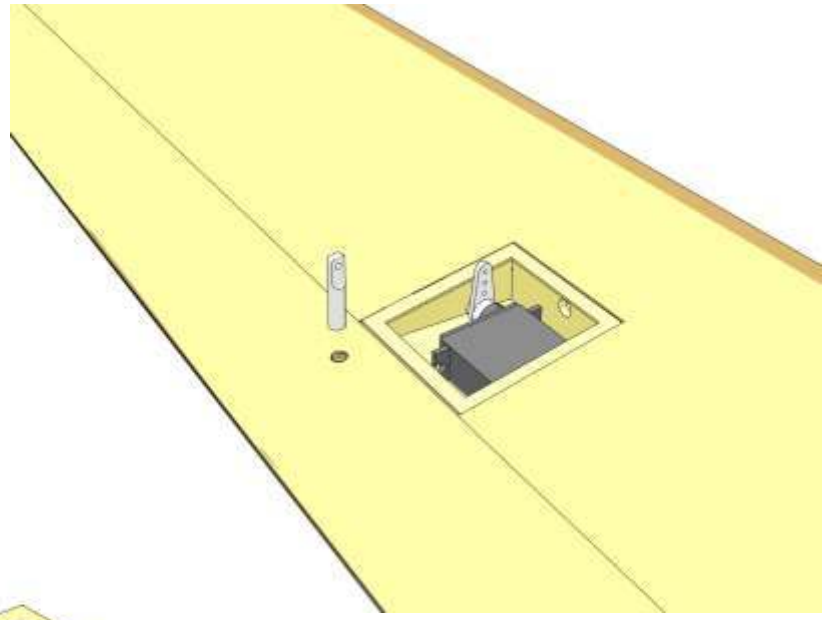

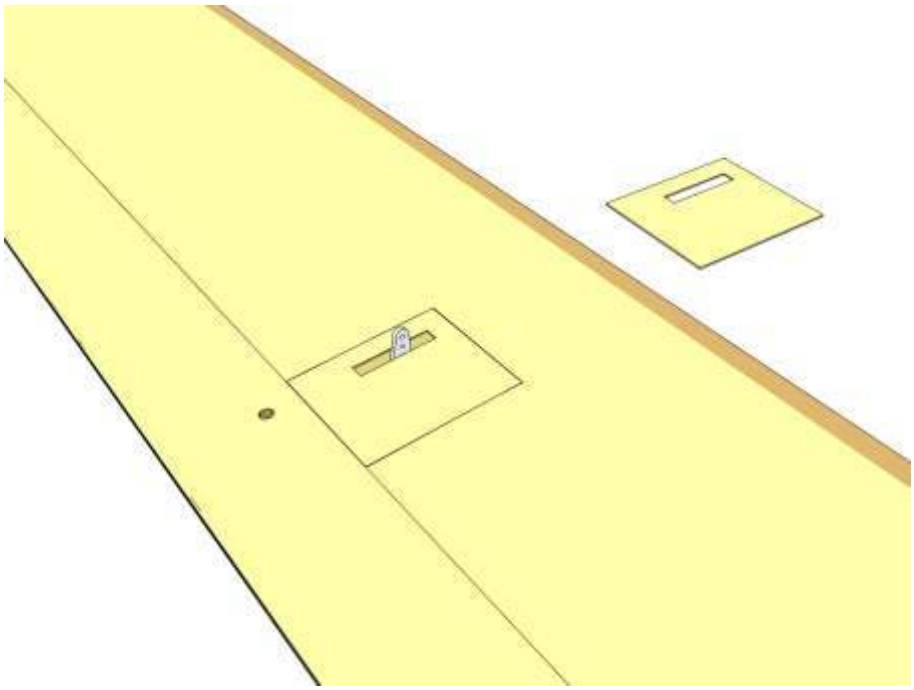

29

Cut slot for control horn in servo cover and install cover.

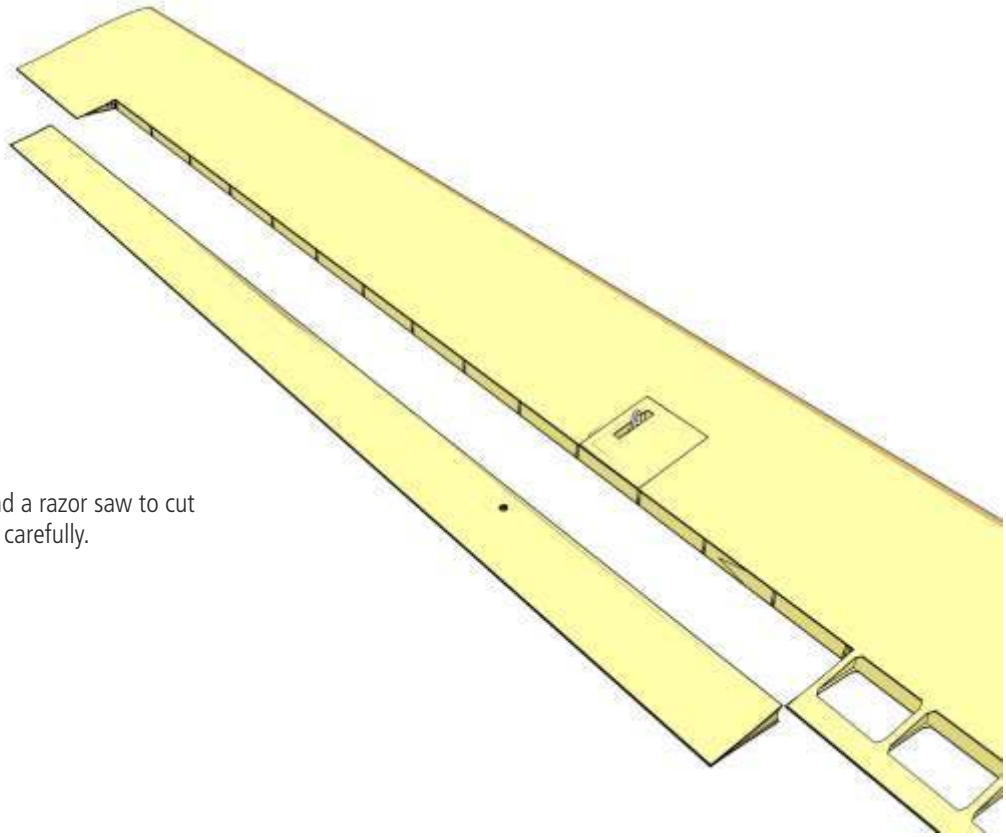

30

Use a sharp balsa knife and a razor saw to cut out the aileron. Then sand carefully.

31

Sand sheeting material flush with front of false leading edge and glue in place leading edge parts T 50 + T 50.1, T 51 + T 51.1 flush with bottom wing sheeting material. Secure with tape until dry.

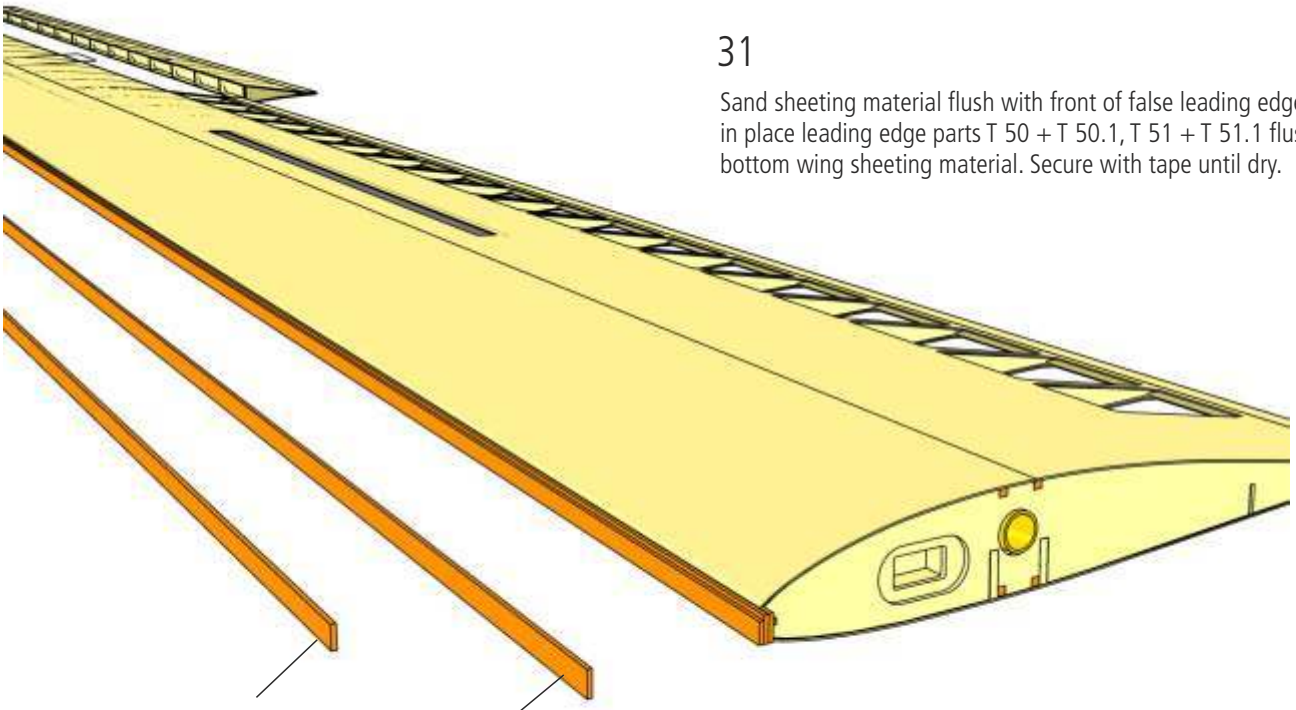

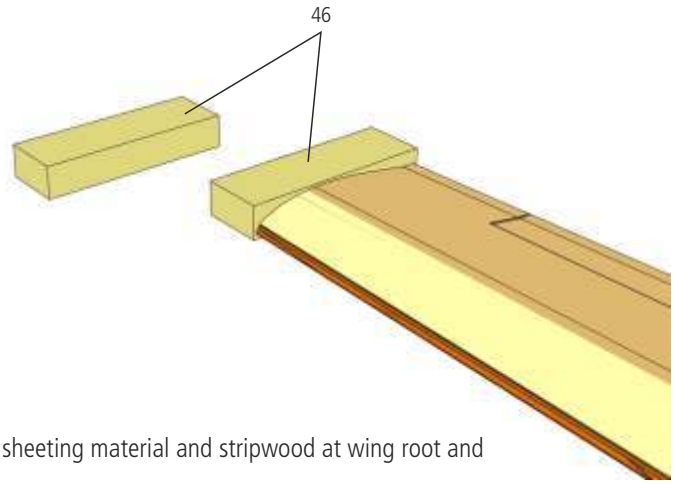

32

Cut off and sand sheeting material and stripwood at wing root and tip.

Glue in place root rib T 0 and spoiler cover. Add wing tip 46. Carefully sand and shape leading edge and wing tip. See section drawings for correct shape.

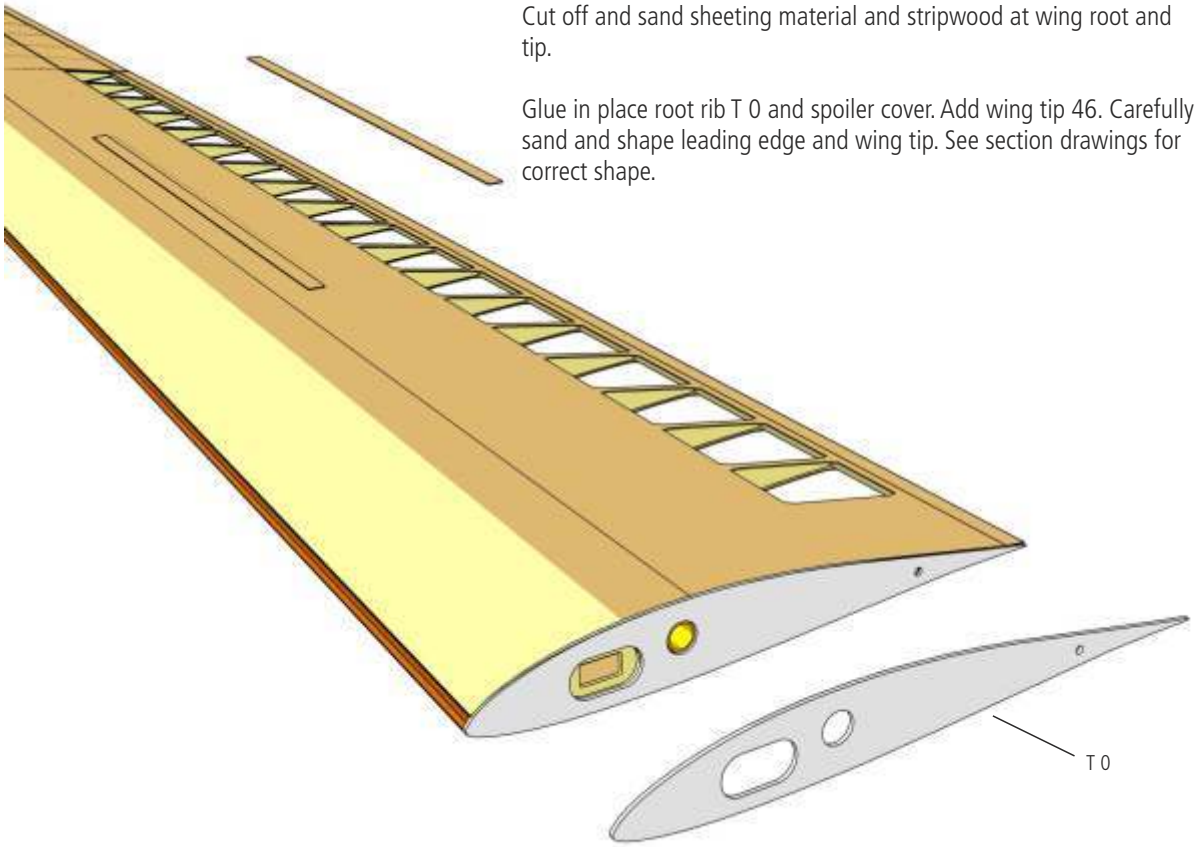

Tailplane

1

Place tailplane jig on a flat building board and secure with tape.
Insert front and rear spars L 17 and L 18, respectively.

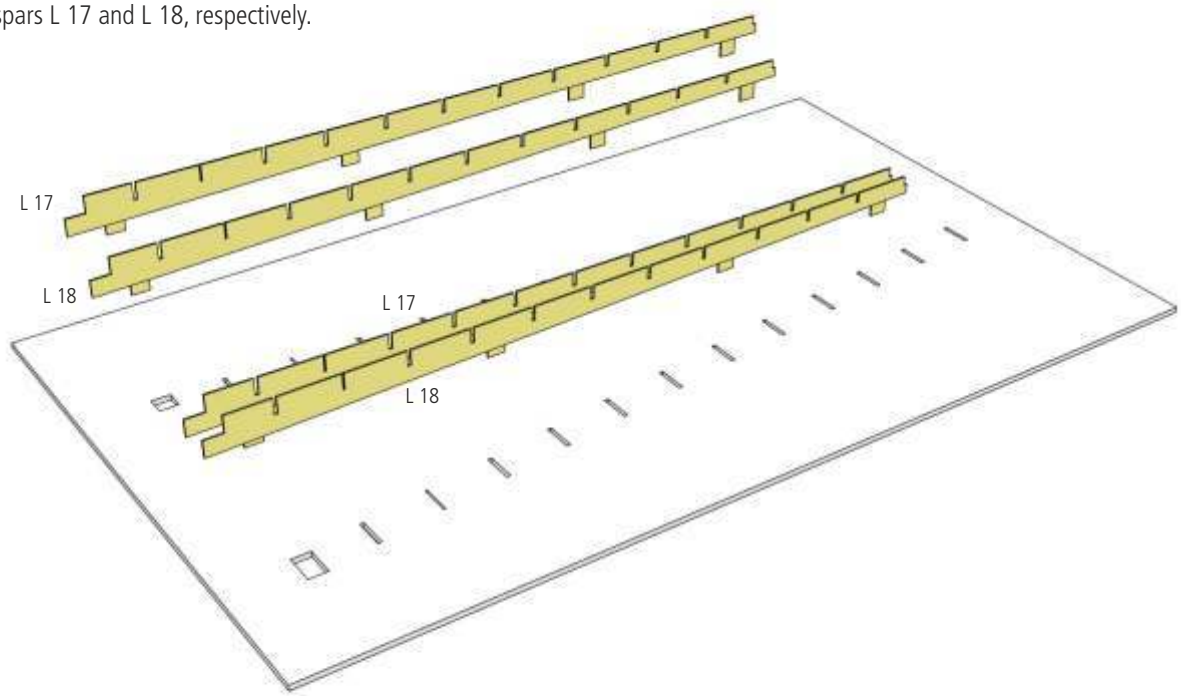

2

Glue together ribs L 1, L 2, L 3 and L 4 and glue assembly in place on spars. Make sure, that holes in ribs are not obstructed by glue.

Glue in place ribs L 5 to L 16.

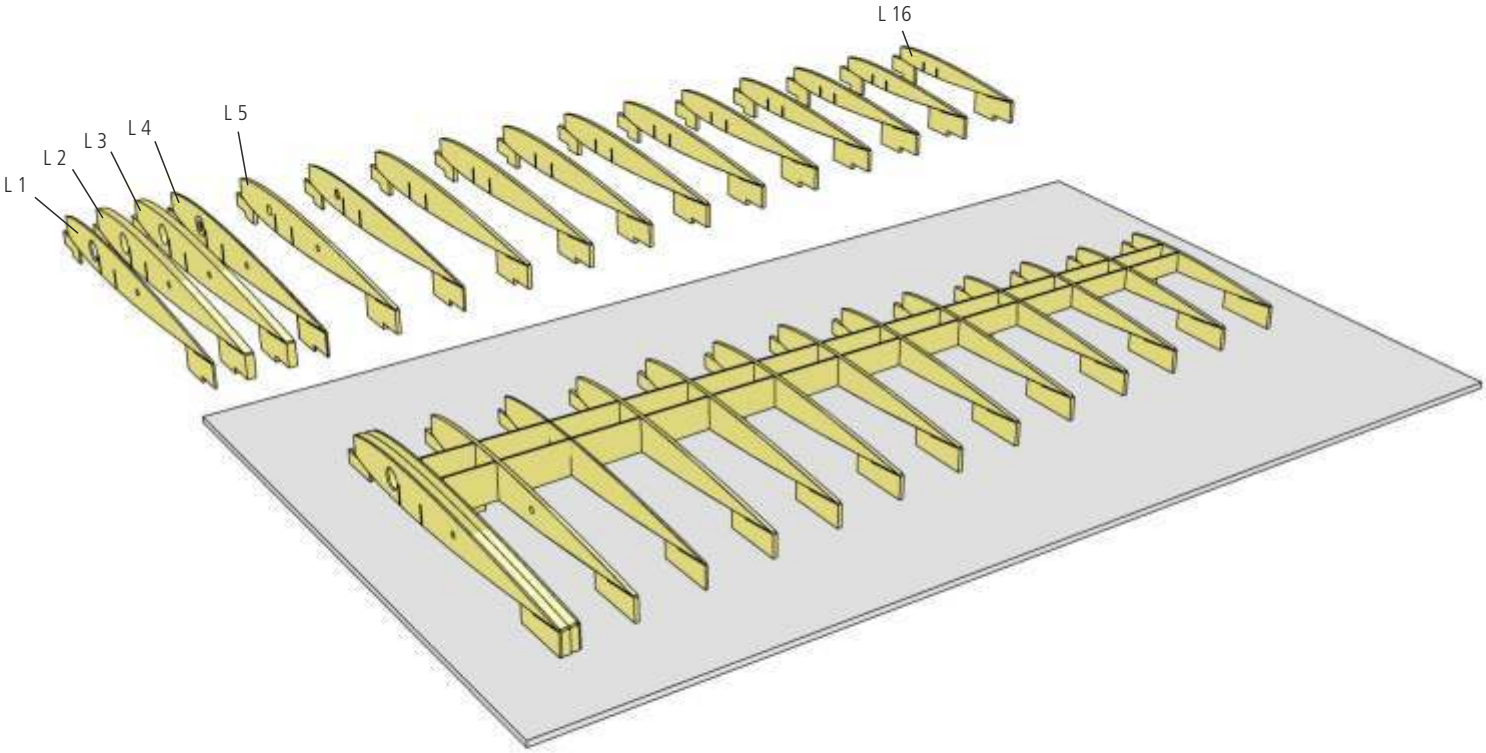

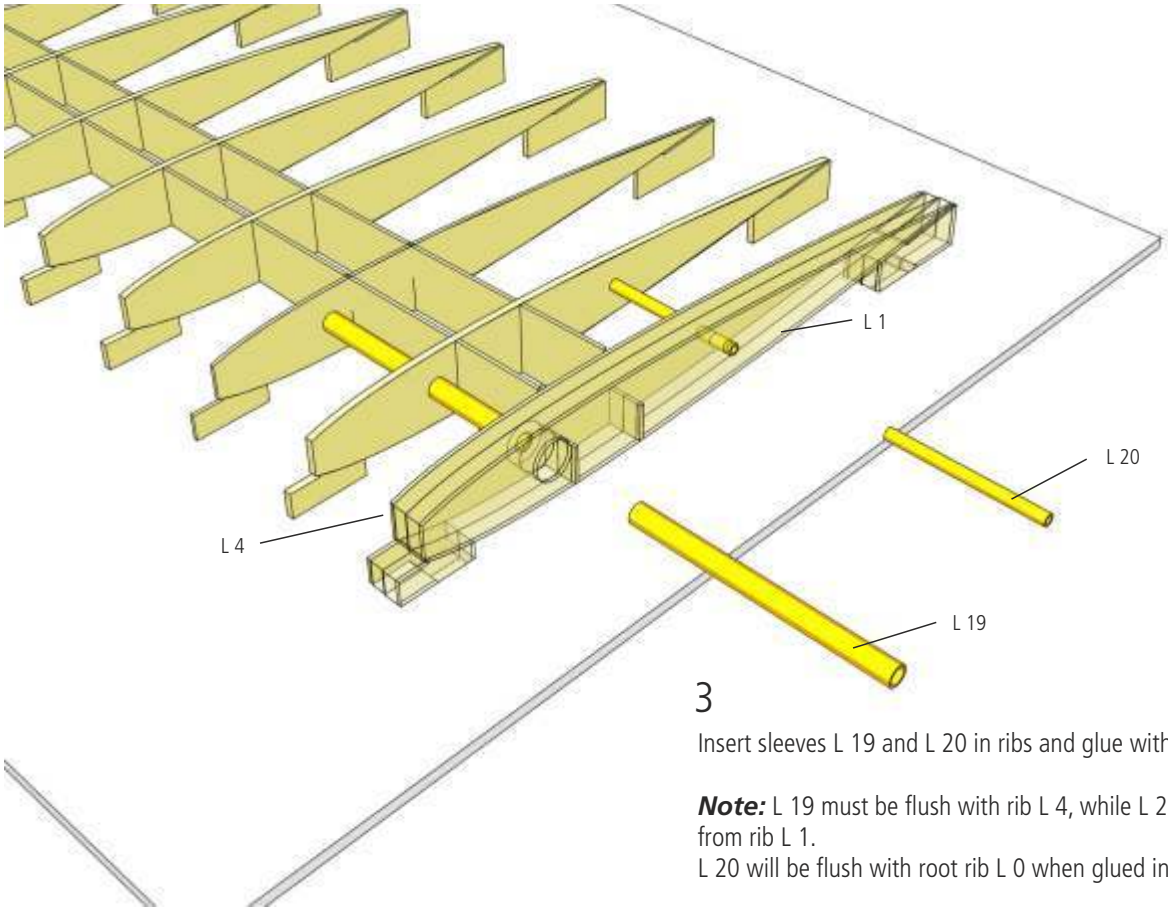

3

Insert sleeves L 19 and L 20 in ribs and glue with epoxy.

Note: L 19 must be flush with rib L 4, while L 20 protrudes 1 mm from rib L 1.
L 20 will be flush with root rib L 0 when glued in place.

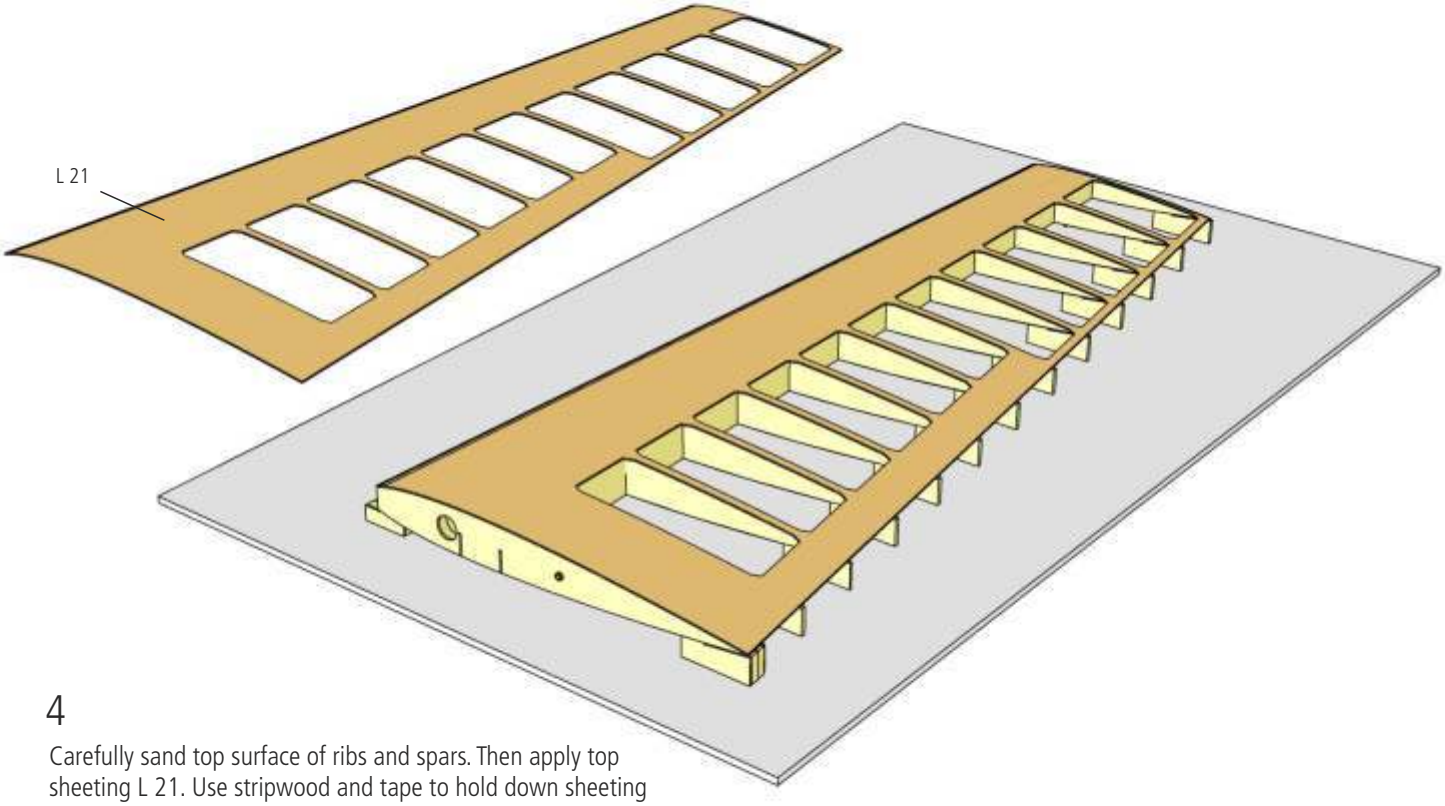

4

Carefully sand top surface of ribs and spars. Then apply top sheeting L 21. Use stripwood and tape to hold down sheeting material until glue has dried.

5

Remove tailplane from jig, cut off building tabs with a razor saw and carefully sand.

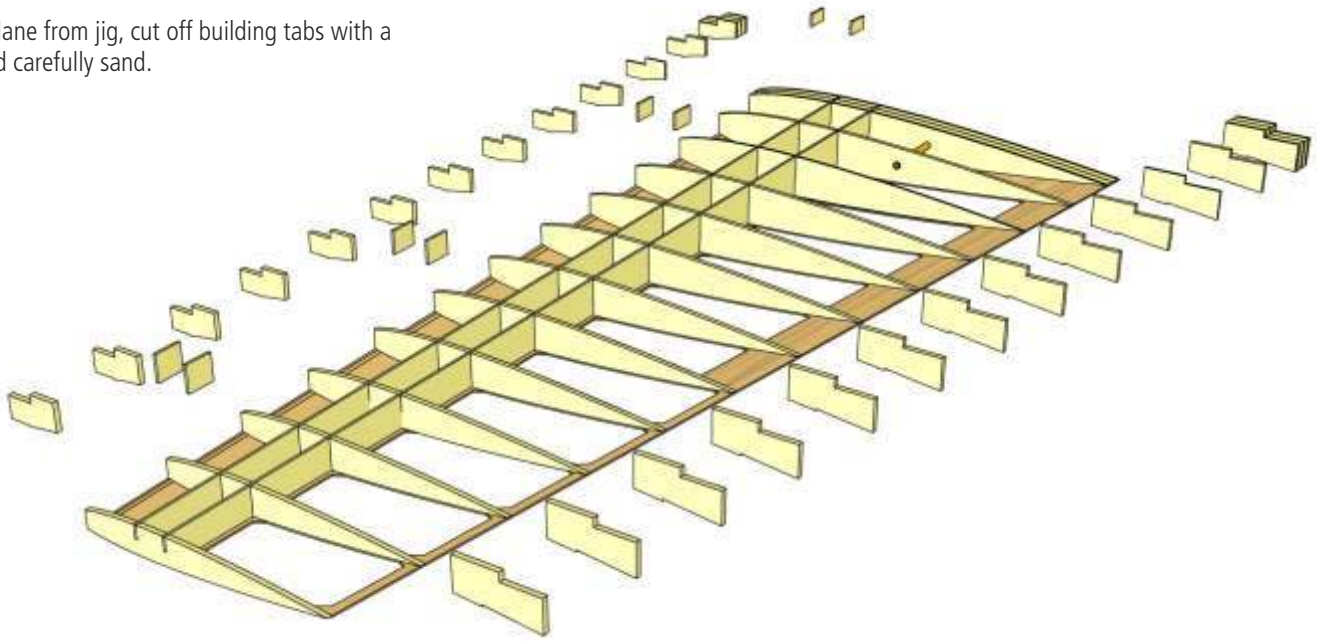

6

Glue in place bottom sheeting L 22 and secure with tape until dry.

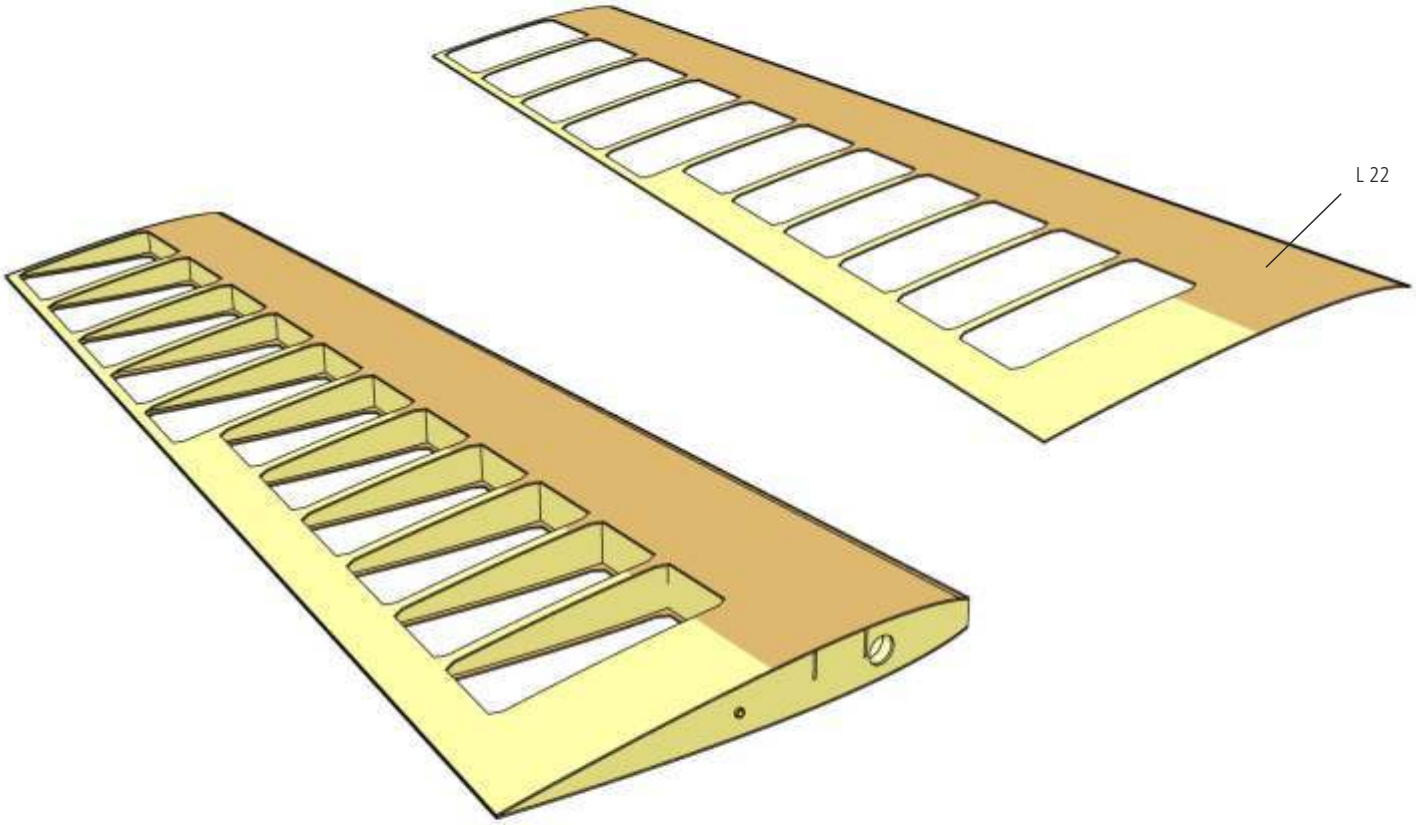

7

Sand sheeting material flush with front edge of ribs and glue both leading edge parts L 23 to ribs and sheeting.

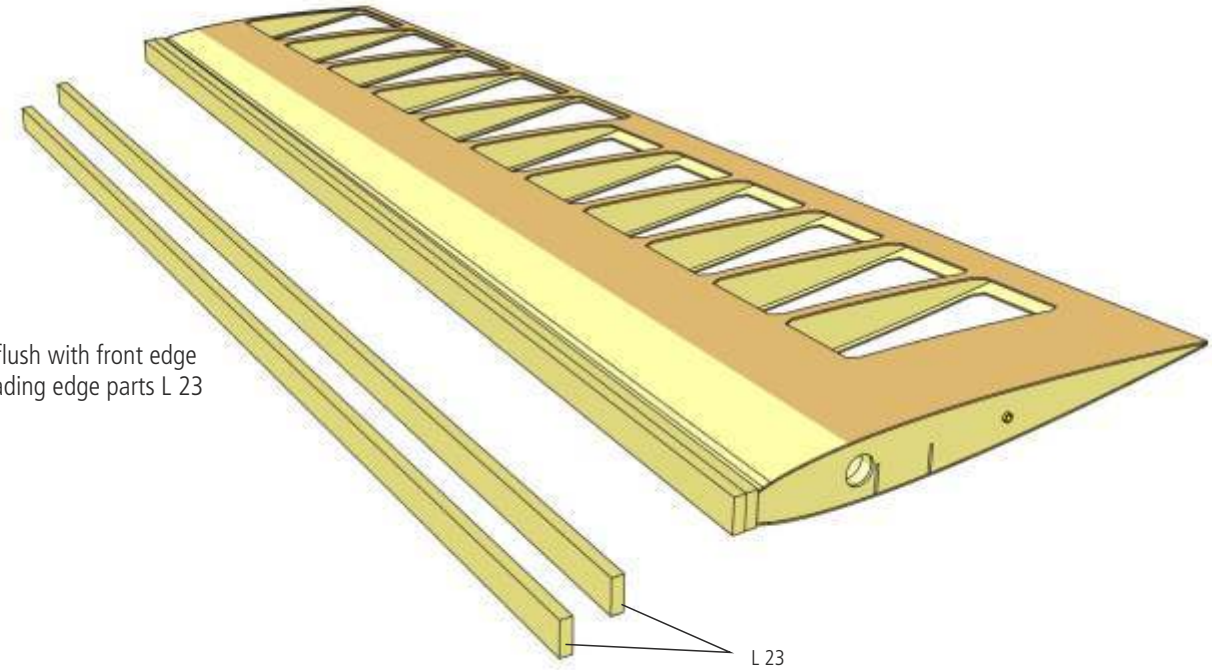

8

Carefully sand root and end rib, then glue in place tailplane tip L 24 and root rib L 0.

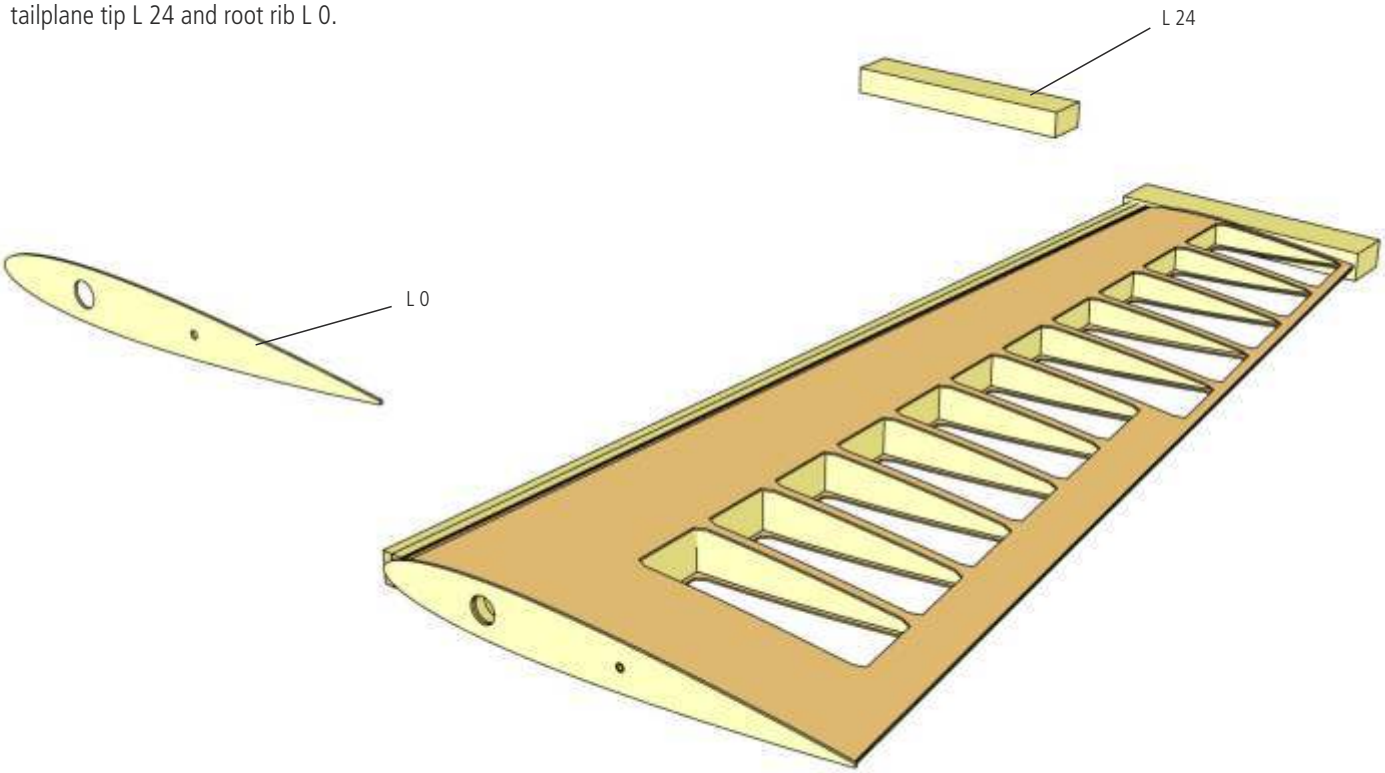

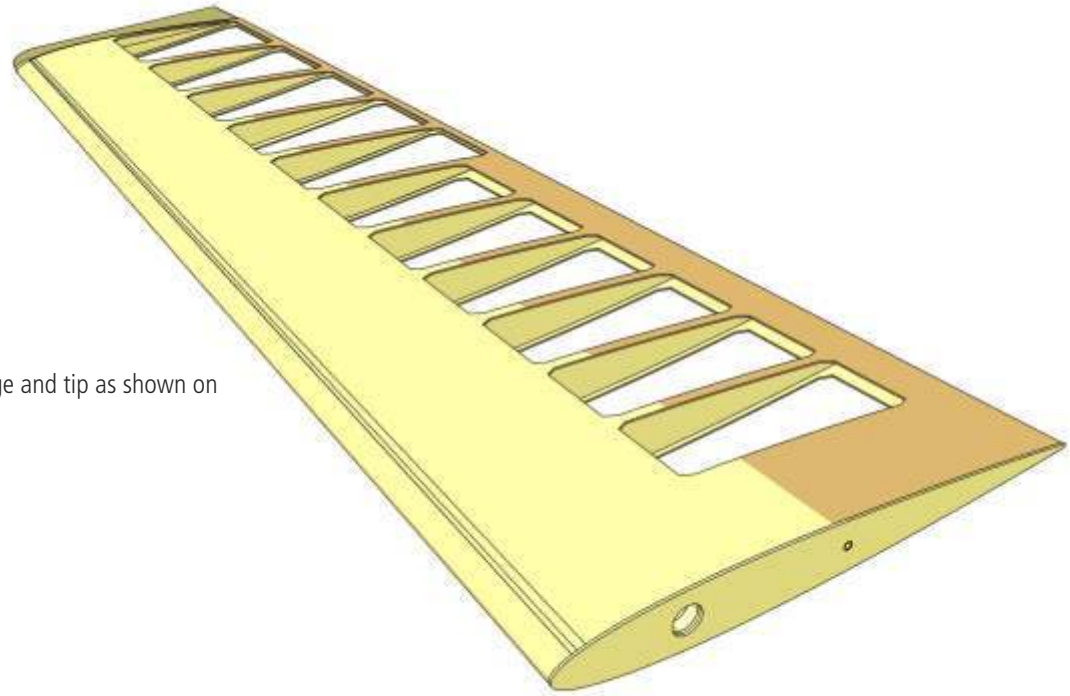

9

Sand and shape leading edge and tip as shown on construction drawing.

10

Drill holes for theaded sleeve 54 (V-tail lock) and 57 (tailplane counterbalance) in sheeting and tip, respectively, and glue sleeves in place. See also SHK construction drawings and general instructions.

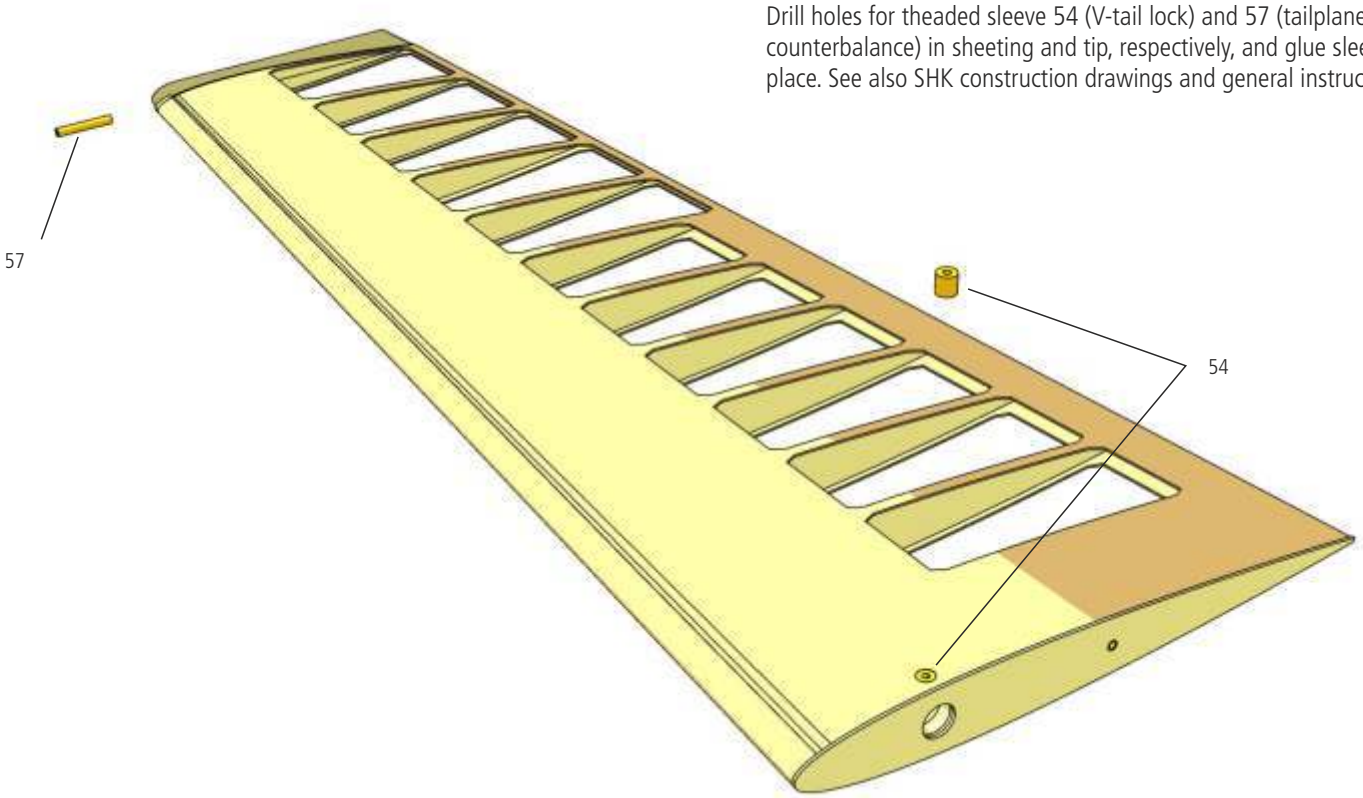

No.	Description	Pcs.	Material	Sheet	Type	Dimensions	Order No.
1	fuselage	1	GRP		hardware		1125/02
2	skid	1	lime		cut part	10×10×10 mm	
3	former	1	plywood		die cut	3 mm	
4	former	1	plywood		die cut	3 mm	
5	tail pivot support	1	aluminium		hardware		
6	tail pivot rod	2	steel		cut part	Ø4×98 mm	
7	tailplane retainer	2	aluminium		hardware		
8	captive nut	1	iron		hardware	M3	7766/33
9	screw	1	iron		hardware	M3×20 mm	7775/20
10	spacer	1	brass		cut part	Ø4/3×98 mm	
11	washer	1	brass		hardware	Ø9/4.3 mm	7780/09
12	washer	9	brass		hardware	Ø7/3.2 mm	7780/08
13	teilwheel leg	1	steel		hardware		7758/23
14	tailwheel	1	aluminium / rubber		hardware		7761/22
15	countersunk screw	2	iron		hardware	M3×30 mm	
16	nut	2	iron		hardware	M3	7774/03
17	outrigger	1	plywood		die cut	3mm	
18	outrigger	1	plywood		die cut	3mm	
19	base plate	1	plywood		die cut	3mm	
20	beelcrank	1+1	aluminium		hardware		
21	tailskid support	1	plywood		cut part	5×10×40 mm	
22	plate	1	aluminium		cut part	2×8×20 mm	
23	self-tapping screw	1	steel		hardware	Ø2,9×16 mm	
24	fuselage tail cap	1	GRP		hardware		1125/03
25	snake outer	3	plastic		cut part	Ø3mm	
26	V-tail actuator	2	GRP		cut part	Ø2 × 1000 mmm	
27	threaded coupler, plain	4	iron, chrome plated		hardware	M2	
28	nut	6	brass		hardware	M2	7773/02
29	clevis	6	steel, chrome plated		hardware	M2	7489/01
30	servo tray	2	plywood		die cut	3 mm	
31	servo tray support	4	plywood		die cut	3 mm	
32	dowel	1	beechwood		cut part	Ø8mm	
33	wing joiner sleeve, fuselage	1	brass		cut part	Ø14/12×148 mm	
34	cockpit floor	1	plastic		hardware		
35	backrest	1	plastic		hardware		
36	instrument panel	1	plastic		hardware		
37	cabin frame	1	plastic		hardware		
38	dowel	1	beechwod		cut part	Ø3 × 48 mm	
39	support	2	plywood		die cut	3 mm	
40	canoopy latch	1	brass / steel		hardware		7329/00
41	canopy	1	plastic		hardware		1125/04
43	wing joiiner sleeve	2	brass		cut part	Ø14/12×165 mm	
44	wing joiner rod	1	steel		cut part	Ø12 mm	
45	incidence peg	2	piano wire		cut part	Ø4×50 mm	
46	wingtip	2	balsa		cut part	147×45×22 mm	
47	spoiler	2	aluminium / plastic		hardware		7329/46
49	aileron horn	2	aluminium		hardware		7491/05
50	threaded rod	6	galvanized iron		hardware		7488/04
51	clevis	2	plastic		hardware		7489/04
52	wing retainer	1	steel / plastic		hardware		7329/55
54	threaded sleeve	2	brass		hardware	Ø4×50 mm	
55	grubscrew	2	steel		cut part	M3×4 mm	7784/01
56	pin	2	steel		cut part	Ø2 × 20 mm	
57	control horn	2	steel, chrome plated		hardware		7491/06
58	tailplane counterbalance	2	brass		hardware	Ø4×50 mm	
61	self-tapping screw	8	steel, chrome plated		hardware	2,2×6.5 mm	7768/21
S1-S3	airfoil template		plywood		die cut	3 mm	
T-0	root rib	2	birch plywood	1	laser cut	2 mm	
T-1 - T-5	rib	je 2	birch plywood	1	laser cut	2 mm	
T-1.1	doubler	2	birch plywood	1	laser cut	2 mm	
T-6 - T-39	rib	je 2	obechi	2+3	laser cut	2 mm	
T-21.1	doubler for rib 21	2	obechi	2	laser cut	2 mm	
T-22.1	doubler for rib 22	2	obechi	2	laser cut	2 mm	
T-36.1	doubler for rib 36	2	obechi	3	laser cut	2 mm	

No.	Description	Pcs.	Material	Sheet	Type	Dimensions	Order-No.
T-37.1	doubler for rib 37	2	obechi	3	laser cut	2 mm	
T-40	spar, front inner	2	birch plywood	5	laser cut	3 mm	
T-40.1	spar, front outer	2	birch plywood	5	laser cut	3 mm	
T-41	spar, mid inner	2	birch plywood	5	laser cut	3 mm	
T-41.1	spar, mid outer	2	birch plywood	5	laser cut	3 mm	
T-42	spar, rear inner	2	birch plywood	6	laser cut	1.5 mm	
T-42.1	spar, rear outer	2	birch plywood	6	laser cut	1.5 mm	
T-43	stringer	16	spruce		cut part	3×3×1000 mm	
T-44	false leading edge	4	spruce		cut part	5×2×1000 mm	
T-45	reinforcement	2	birch plywood	5	laser cut	3 mm	
T-46	reinforcement	2	birch plywood	5	laser cut	3 mm	
T-47	reinforcement	2	birch plywood	6	laser cut	1.5 mm	
T-48	false trailing edge	2	birch plywood	11	laser cut	0.8 mm	
T-48.1	false trailing edge	2	birch plywood	11	laser cut	0.8 mm	
T-49	false leading edge, inner	2	obechi	7	laser cut	1.5 mm	
T-49.1	false leading edge, outer	2	obechi	7	laser cut	1.5 mm	
T-50	leading edge, inner	2	obechi	7	laser cut	1.5 mm	
T-50.1	leading edge, outer	2	obechi	7	laser cut	1.5 mm	
T-51	leading edge, inner	2	obechi	7	laser cut	1.5 mm	
T-51.1	leading edge, outer	2	obechi	7	laser cut	1.5 mm	
T-52	aileron leading edge	2	birch plywood	8	laser cut	1 mm	
T-53	aileron horn support	2	birch plywood	4	laser cut	1 mm	
T-54	aileron horn support	6	birch plywood	4	laser cut	1 mm	
T-55	reinforcement	2	birch plywood	4	laser cut	1 mm	
T-56	servo tray	2	birch plywood	4	laser cut	1 mm	
T-57	servo tray	2	birch plywood	4	laser cut	1 mm	
T-58	wing joiner sleeve	2	brass		cut part	14/12×165 mm	
T-59	wing joiner sleeve	2	brass		cut part	4/3×65 mm	
T-60	sleeve end stop	2	birch plywood	5	laser cut	3 mm	
T-61	top sheeting, inner L/R	2	A-Tex	12+13	laser cut	0.7 mm	
T-61.1	top sheeting, outer L/R	2	A-Tex	12+13	laser cut	0.7 mm	
T-62	bottom sheeting, inner L/R	2	A-Tex	14+15	laser cut	0.7 mm	
T-62.1	bottom sheeting, outer L/R	2	A-Tex	14+15	laser cut	0.7 mm	
T-63	frame, servo well	2	birch plywood	4	laser cut	1 mm	
T-64	aileron spar	2	birch plywood	8	laser cut	1 mm	
L-0	root rib	2	birch plywood	8	laser cut	1 mm	
L-1	rib	1	birch plywood	8	laser cut	1 mm	
L-2, L-3	rib	je 2	balsa	10	laser cut	4 mm	
L-4	rib	2	birch plywood	8	laser cut	1 mm	
L-5	rib	2	balsa	9	laser cut	2 mm	
L-6	rib	2	birch plywood	8	laser cut	1 mm	
L-7 - L-16	rib	je 2	balsa	9	laser cut	2 mm	
L-17	taiplane spar, front	2	birch plywood	8	laser cut	1 mm	
L-18	tailplane spar, rear	2	birch plywood	8	laser cut	1 mm	
L-19	sleeve	2	brass		cut part	5/4×65 mm	
L-20	sleeve	2	brass		cut part	3/2×40 mm	
L-21	top sheeting L/R	2	A-Tex	16	laser cut	0.7 mm	
L-22	bottom sheeting L/R	2	A-Tex	16	laser cut	0.7 mm	
L-23	leading edge	4	balsa	10	laser cut	4 mm	
L-24	tailplane tip	2	balsa		cut part	110×20×12 mm	
A-0	servo tray	1	birch plywood	18	laser cut	3 mm	
A-1	servo tray, front support	2	birch plywood	18	laser cut	3 mm	
A-2	servo tray, rear support	2	birch plywood	18	laser cut	3 mm	
A-3	servo tray, tow release	1	birch plywood	17	laser cut	3 mm	
A-4	servo tray, tow release	2	birch plywood	17	laser cut	3 mm	
A-5	servo tray, tow release	3	birch plywood	17	laser cut	3 mm	
A-6	servo tray, tow release	1	birch plywood	17	laser cut	3 mm	
A-7	servo tray, tow release	1	birch plywood	17	laser cut	3 mm	
	wing building jig	3	Depron	0	laser cut	6 mm	
	tailplane building jig	1	Depron	0	laser cut	6 mm	
	wing templates	6	Depron	0	laser cut	6 mm	
	wing jig strip wood	2	spruce		cut part	3×8×1000 mm	
	decals	1	plastic		hardware		

Did you enjoy building your model sailplane?

Then let us introduce another model from our range of historic sailplanes.

Mü-13e Bergfalke I

The Mü-13e (later Bergfalke I) was designed and built in 1951, at a time when soaring was banned in Germany.
Egon Scheibe based the new design on the pre-war sailplane Mü-13 of the Akademische Fliegergruppe München.
The model is a scale reproduction of the original.
You will like the all-wood construction of fuselage and wing, the innovative building jig, the precision of the laser-cut parts and the high quality of selected wood.
The Bergfalke has a wing span of 3.5 meters and you will enjoy building as well as flying this model. The manouverable model will do well on a flat field or on the slope.

The kit contains:
Laser-cut wood for fuselage and wing, innovative sheeting material A-Tex, canopy, complete hardware package including stripwood, hinges, screws etc. and comprehensive illustrated building instructions.

Wingspan	3,500 mm
Length	1,600 mm
Flying weight	min. 3,900 g
Wing airfoil	HQ 3.5 Oldtimer
Radio	Rudder, elevator (V-tail), ailerons, spoilers, (tow release)

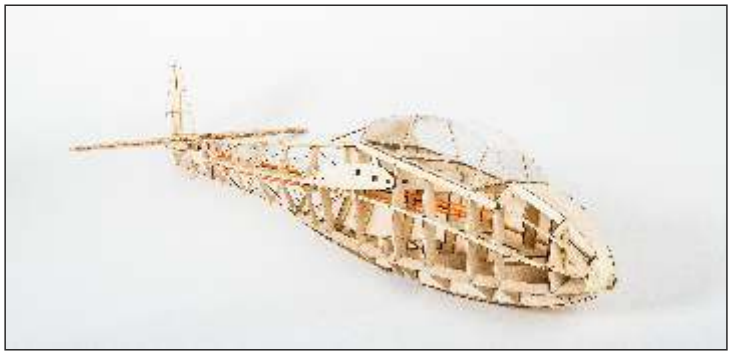

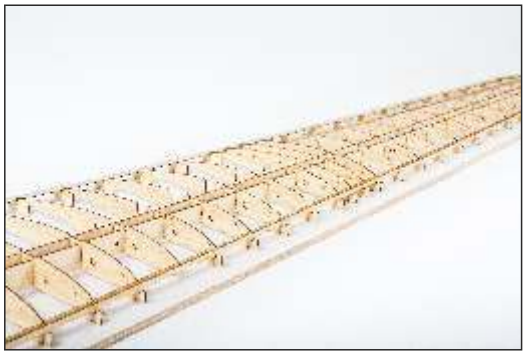

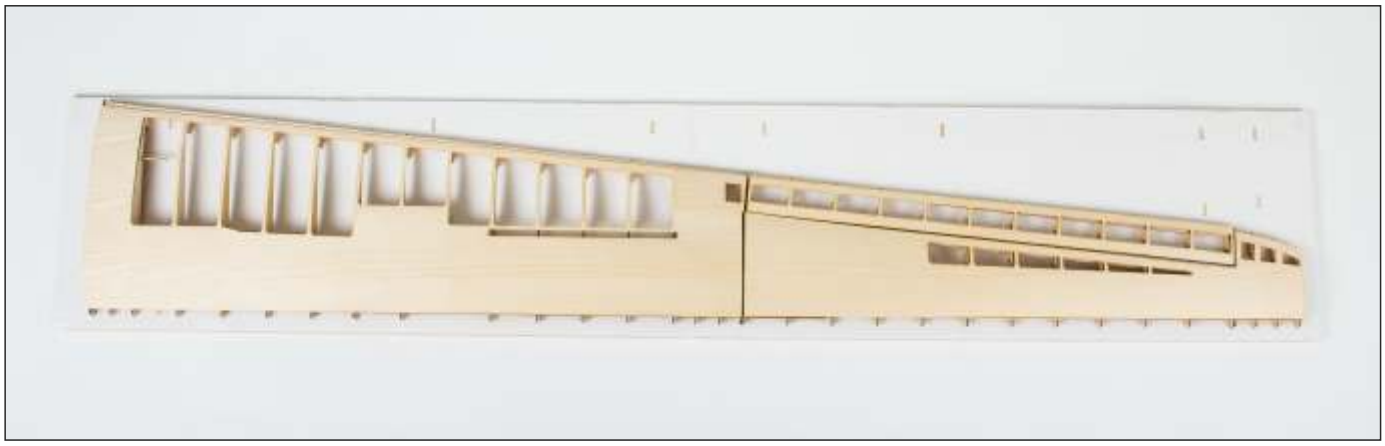

Some more models from our range ...

Mü13-E Bergfalke 1124/00
All-wood construction, laser-cut parts.
Wingspan 3,500 mm

Ka 6-E 1127/00
Kit inculdes GRP fuselage and parts for conventional wings.
Wingspan 3,600 mm

Fournier RF-4D 1355/00
Kit inculdes GRP fuselage, foam wings and complete hardware package.
Wingspan 2,815 mm

Jodel D.9 Bébé 1312/00
All-wood construction, laser-cut parts.
Wingspan 2,400 mm

Find many more models at www.aero-naut.de

aero-naut Modellbau
Stuttgarter Strasse 18-22
D-72766 Reutlingen

www.aero-naut.de

1125/01 - E1 - 12/2016