FPV Flying Wing

Assembly Schematic

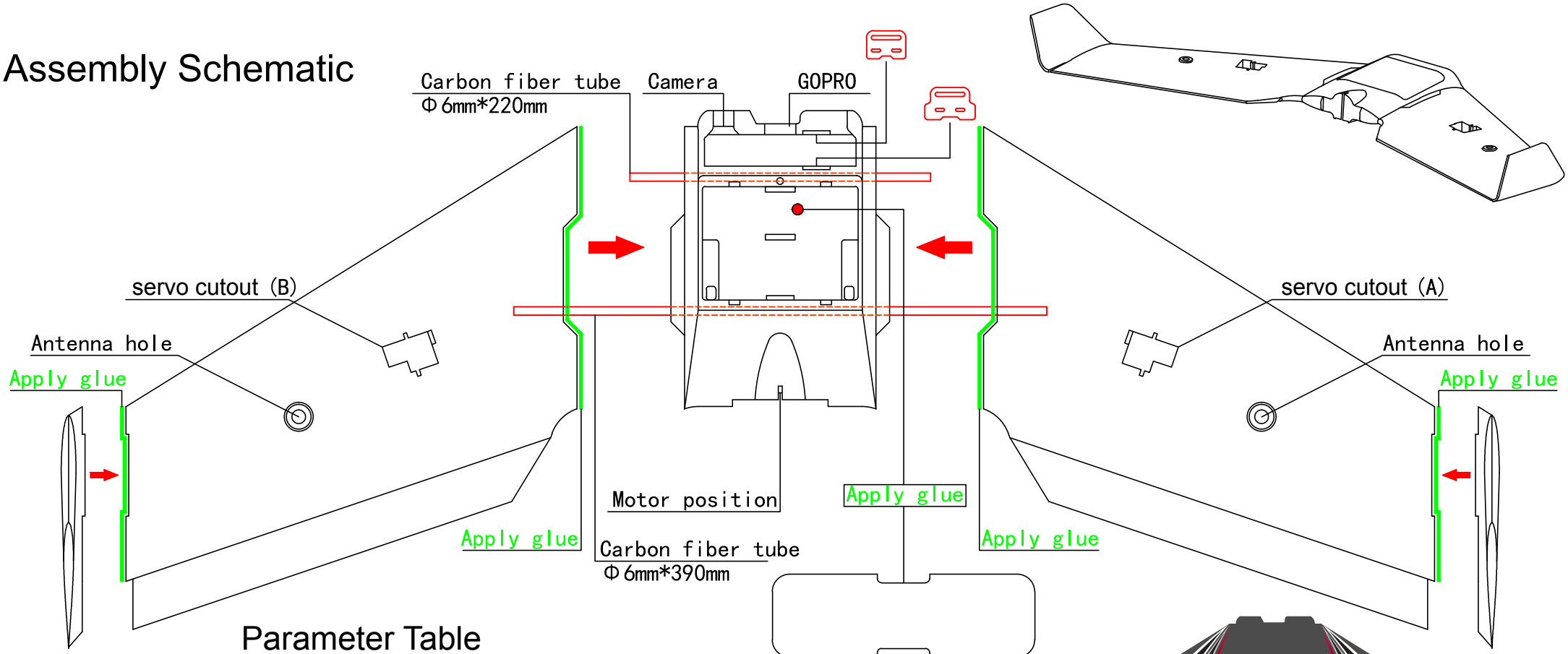

Battery mounting plate

Parameter Table

Wingspan	820mm
Length	405mm
Weight	170 grams(Without electronic equipment)
Radio	3 channels with elevon mixing
Servo	9 grams x 2 pcs
Battery	1500-1800 mAh 3S 40C-60C
ESC	20A-30A
Motor	2204/2300KV-2205/2300KV
Prop	Max6045 (5045/6045)

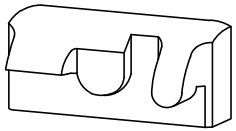

Cut and fill blocks according to the size of the camera.

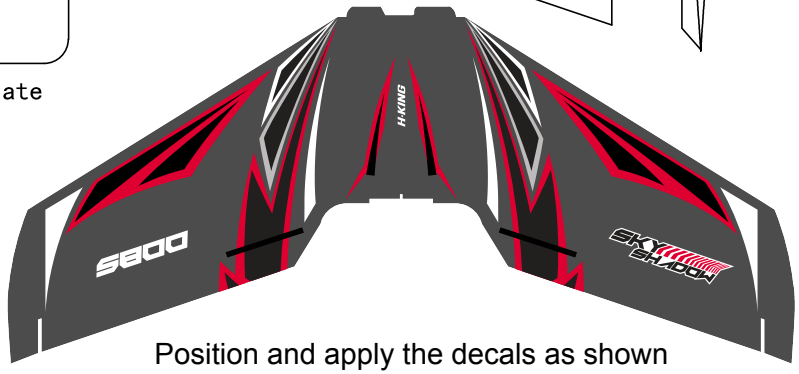

Position and apply the decals as shown

This is not a toy.
Age recommendation: not suitable for children under 14 years old.

FPV Flying Wing

Assembly Schematic

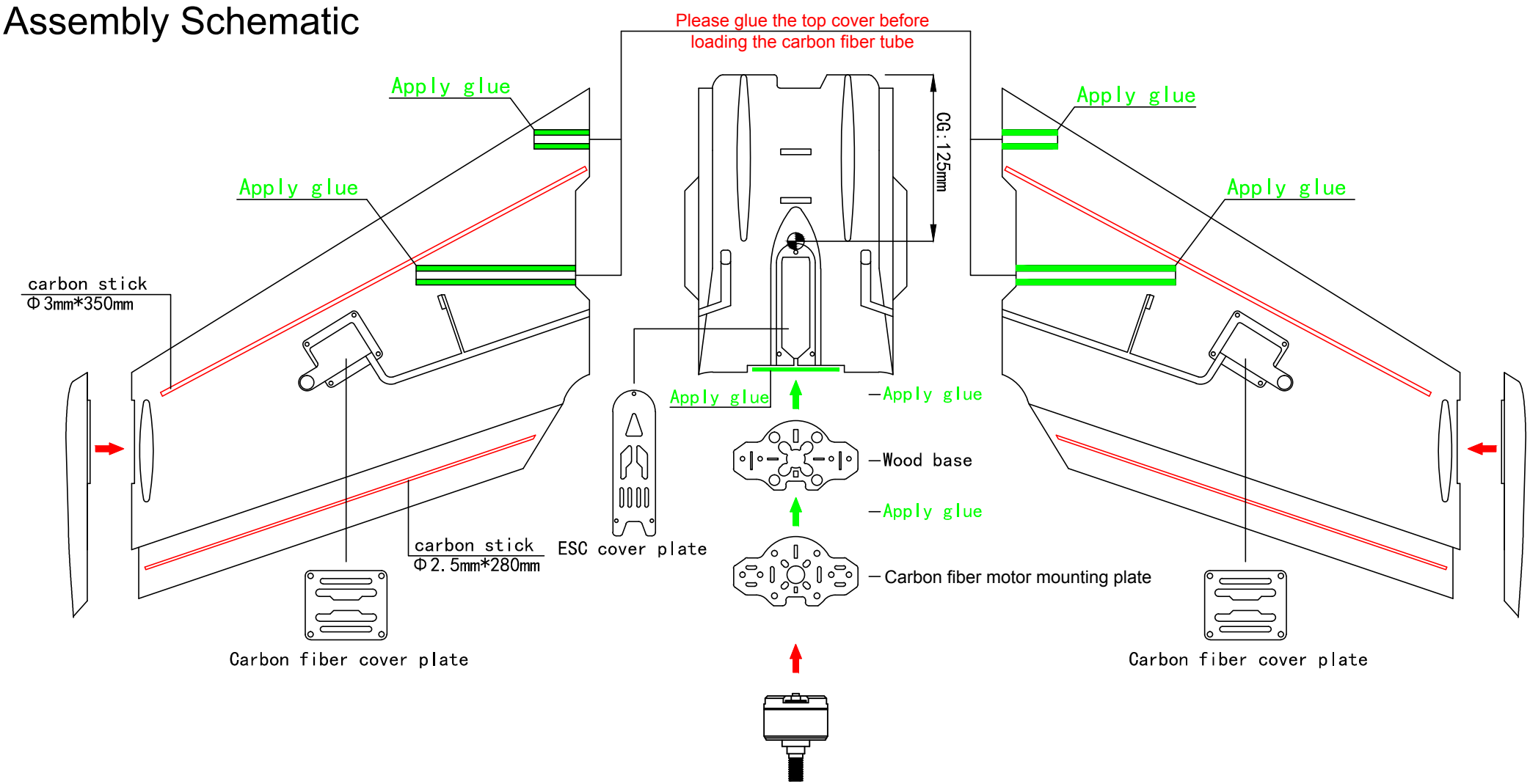

WARNING: Read the ENTIRE instruction manual to become familiar with the features of the product before operating. Failure to operate the product correctly can result in damage to the product, personal property and cause serious injury. This is a sophisticated hobby product. It must be operated with caution and common sense and requires some basic mechanical ability. Failure to operate this Product in a safe and responsible manner could result in injury or damage to the product or other property. This product is not intended for use by children without direct adult supervision.

FPV Flying Wing

Assembly Schematic

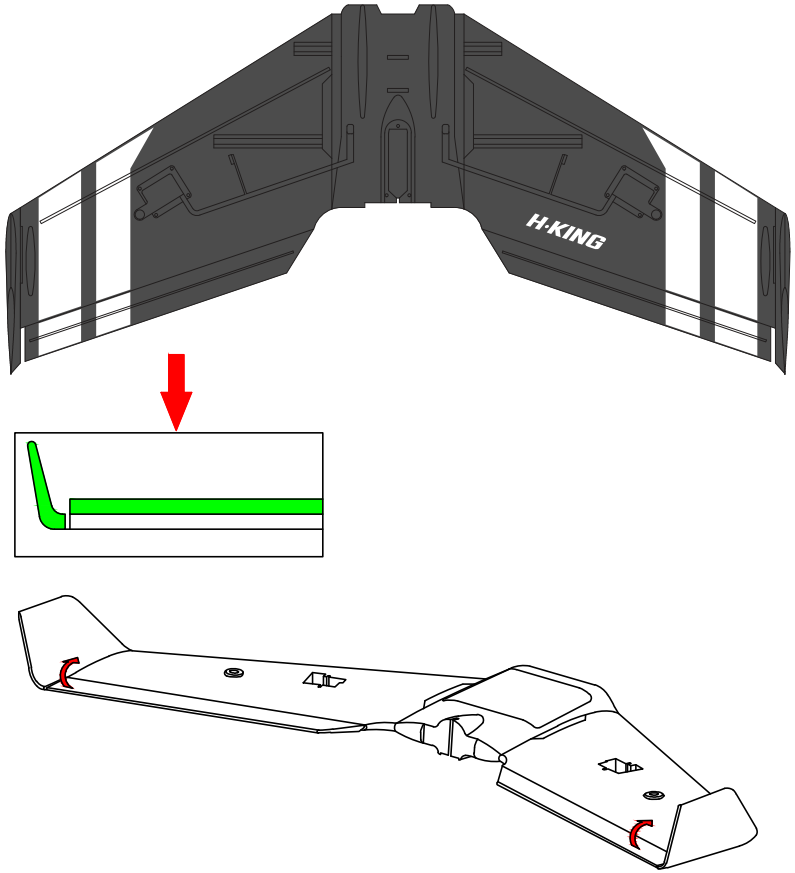

The elevons should have a slight upward deflection, when the controls are neutral.

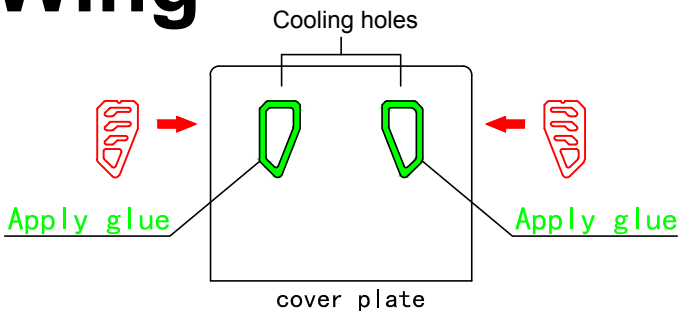

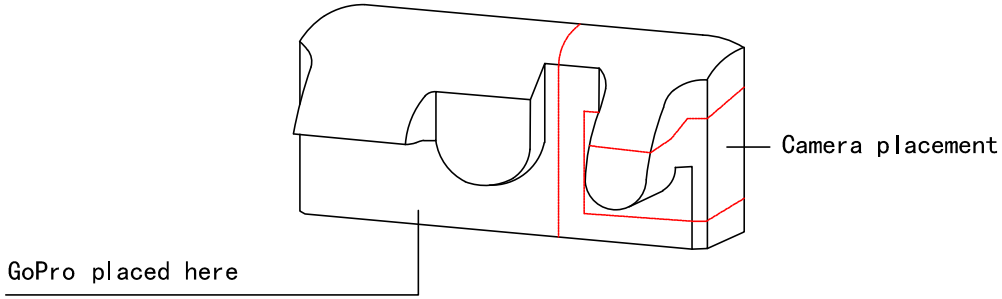

Cut the fill blocks according to the size of the camera.

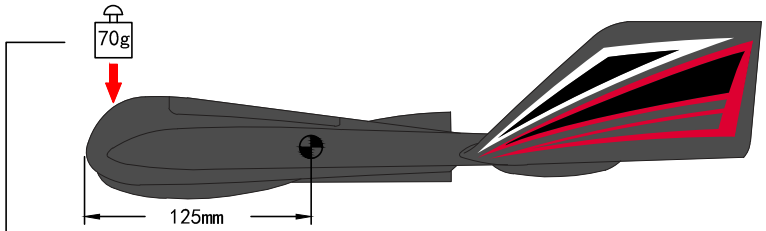

Need to add 70 grams of weight in the nose when a GOPRO camera is not installed

NOTICE: Remove the propeller and the propeller adapter from the motor shaft during control surface adjustments. Any movement of the throttle will cause the propeller to spin.

This is not a toy.
Age recommendation: not suitable for children under 14 years old.

FPV Flying Wing

PCB for PNP

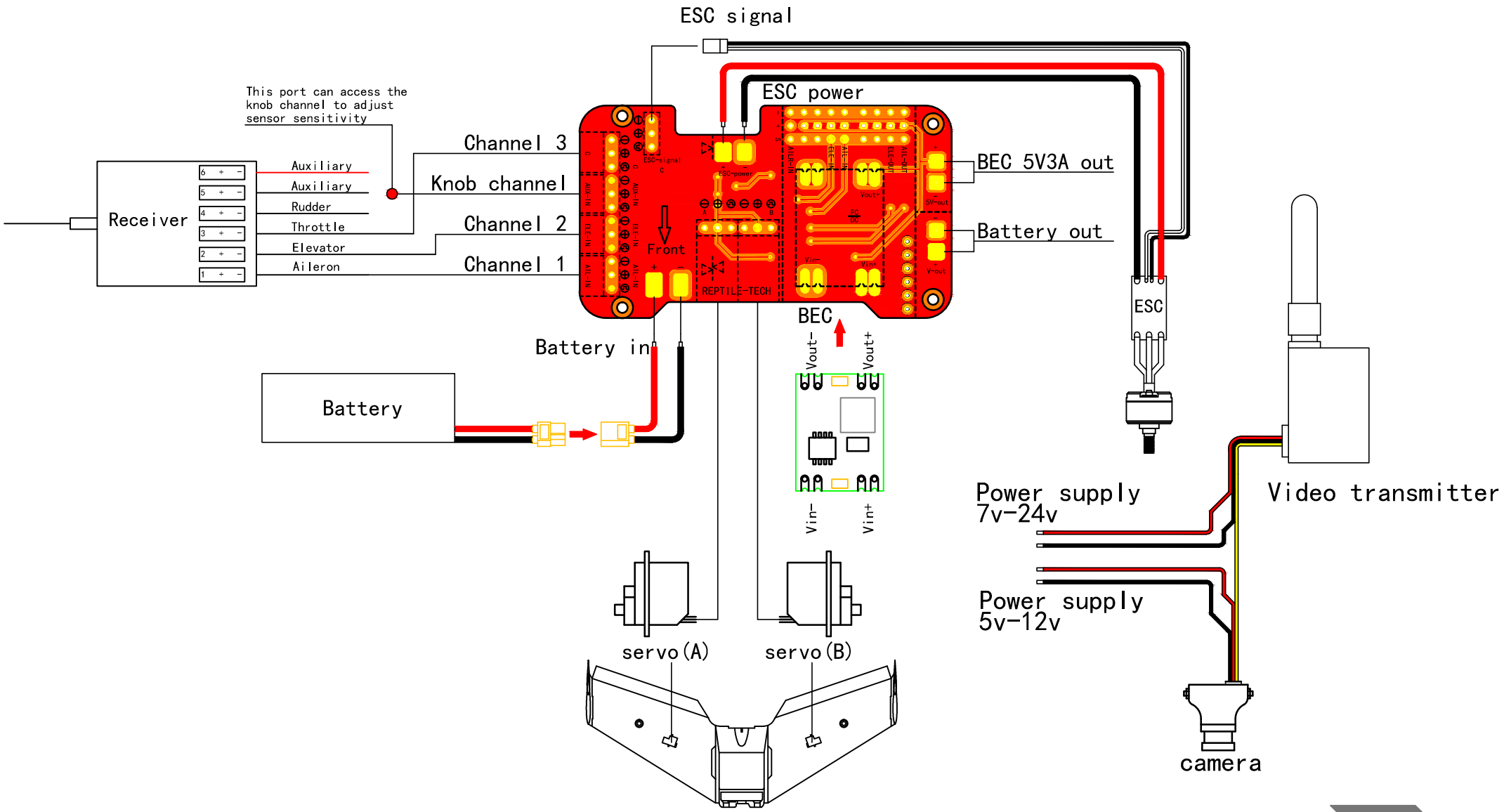

FPV Flying Wing

PRODUCT SPECIFICATION

MODE: TX200

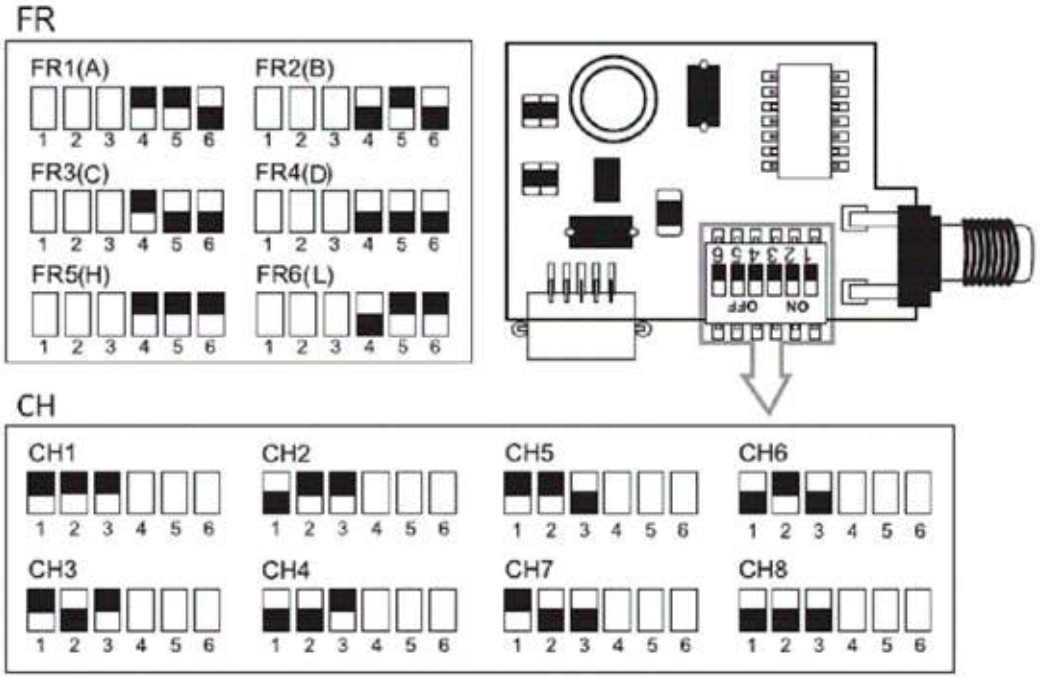

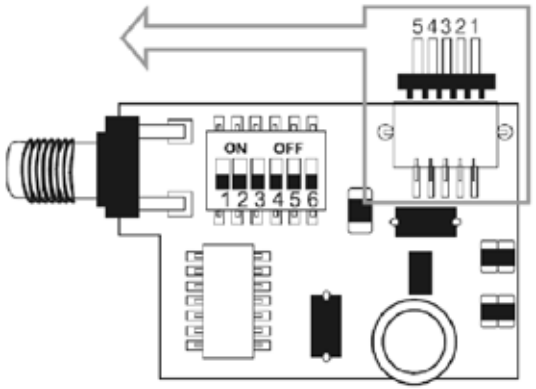

Line 1:VDD_IN(7-24V)
Line 2:GND
Line 3:VIDEO_IN
Line 4:AUDIO_IN
Line 5:GND

FR \ CH		CH							
		CH1	CH2	CH3	CH4	CH5	CH6	CH7	CH8
FR	FR1(A)	5865MHz	5845MHz	5825MHz	5805MHz	5785MHz	5765MHz	5745MHz	5725MHz
	FR2(B)	5733MHz	5752MHz	5771MHz	5790MHz	5809MHz	5828MHz	5847MHz	5866MHz
	FR3(C)	5705MHz	5685MHz	5665MHz	5645MHz	5885MHz	5905MHz	5925MHz	5945MHz
	FR4(D)	5740MHz	5760MHz	5780MHz	5800MHz	5820MHz	5840MHz	5860MHz	5880MHz
	FR5(H)	5658MHz	5695MHz	5732MHz	5769MHz	5806MHz	5843MHz	5880MHz	5917MHz
	FR6(L)	5362MHz	5399MHz	5436MHz	5473MHz	5510MHz	5547MHz	5584MHz	5621MHz

Flight Controller Manual

VERY IMPORTANT：The Controller has to re-learn center position after installation,or replacing a new radio system, or making a trimming(or Sub-Trim)change within the transmitter, otherwise the servos may move to one side automatically when switching to hold mode.To do this,just quickly flip the flight mode switch twice between rate mode and hold mode within 1 second!

Features

1.Four Model Types supported: single aileron, dual ailerons , flapperons, delta and vtail.

2.Three Flight Modes supported:

a. Rate Mode ,Rate Mode for offset correction.

b. Hold Mode ,HOLD mode for attitude hold

c. Gyro Off Mode,transsmiter control the plane directly.

3.Two kinds of Gain Control Method supported:Master Gain from the radio, Independent Axis Gain from the Variable resistor on the Controller board.

4.Using superior algorithm, Bring a more comfortable and more sensitive sense of control .

Specifications

1. Voltage Range：5-6V DC. (Do Not Use Dry Cell!)
2. Dimensions：40mm x 25mm.
3. Weight：6.5g.

Packing List

1. Flight Controller board 2. manual

Status LED Description

LED OFF：Flight Controller in Gyro Off Mode.

LED ON：Flight Controller in Rate Mode.

LED flash: Flight Controller in Hold Mode.

WARNING: PLEASE READ THE FOLLOWING STEPS VERY CAREFULLY BEFORE YOU START TO INSTALL A NEW PLANE!

Step 1:Mounting

The board need to be firmly mounted near the center of the gravity of the plane by using the double-tape provide.Please make sure the longer side of the board is along with the heading direction.After mounting ,please check again if the board is attached firmly in the plane.

Step 2:Model Type Selection

The DIP switches set the WING mode,Please match the type of your aircraft with Normal Airplane(single aileorn),Normal Airplane(dual aileron for flapperon), Delta-wing (Flywing-wing)and V-tail according the pictures 1 to 4. if you change any DIP switch settings, power cycle the device to enable the new setting to take effect.

Step 3:Wiring

Please connect the control board and the radio receiver using wires provide according the pictures 1 to 4.Pay attention to the color of wires to avoid anti-plug.

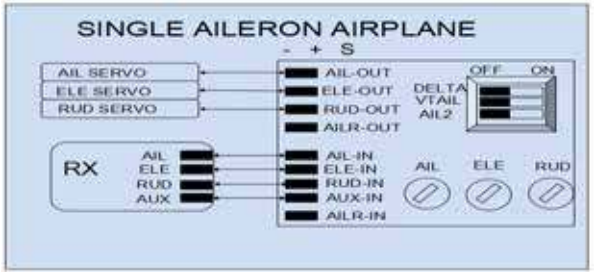

Pic 1

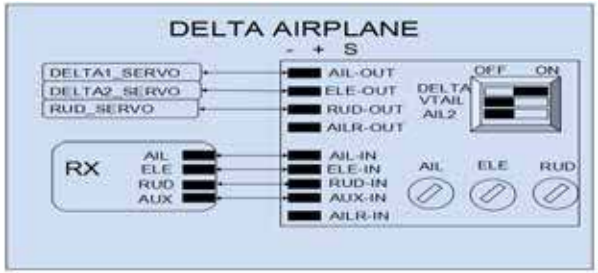

Pic 2

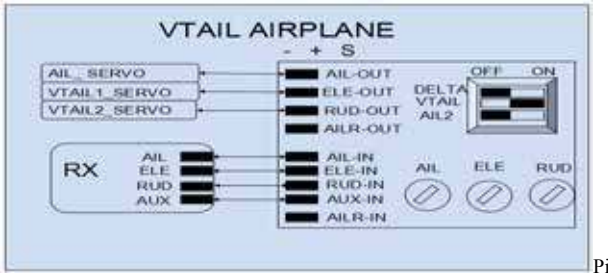

Pic 3

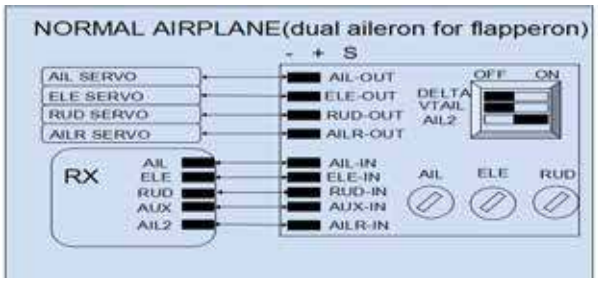

Pic 4

Step 4:Switch and Master Gain Channel Configure

Assign a 3-pos switch to the channel which connected the pins"IN-4" (AUX-IN) for switching the flight mode in flight.When use a 2-pos swtich,you can only switch between Rate Mode and Hold Mode,So you can not switch to Gyro Off Mode.It will be set to Rate Mode by default if switch channel is not connected to the board. If your transsmiter has Travl Adjust Function(End Point Adjust Function),you can change the switch channel's End Point to change Master Gain.

Step 5:Gyro direction and Gyro Gain configure

Befor flight, you have to verfy that the gyro compensation direction is OK, otherwise, it could lead to losing control or even crash during the flight!

the VR gain POTs on the Flight control the correction gain and direction for each of the pitch (ELE), roll (AIL) and yaw (RUD) axis.

5 o'clock = max gain in one direction

12 o'clock = zero gain

7 o'clock = max gain in opposite direction

To perform the examination,power on the board,pick the plane up and check it by following the six steps below:

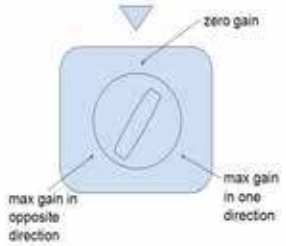

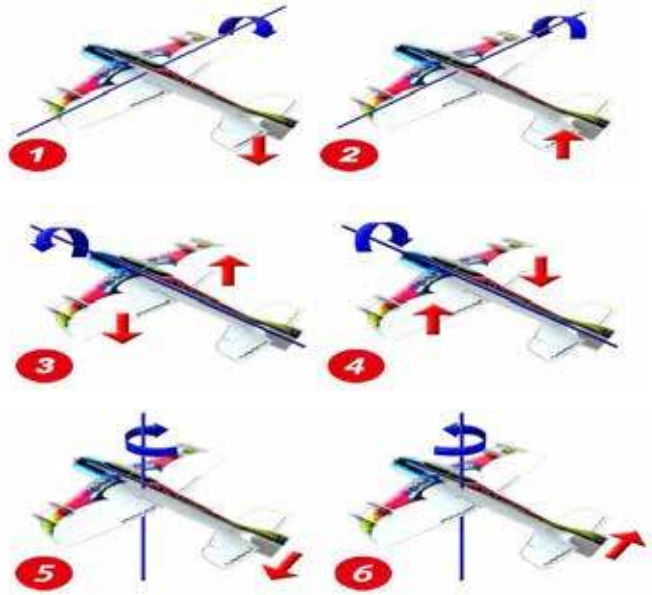

For your first flight, the recommand gain value is 2/10 o'clock!

Step 6: re-learn center position

Quickly flip the flight mode switch three times between rate mode and hold mode within 1 second!