Super Combo DOMINATOR

T-REX 550L

INSTRUCTION MANUAL

使用說明書

RH55E09XT

ALIGN

Contents

GPRO

FLYBARLESS SYSTEM

Windows | Google play | App Store

Thank you for buying ALIGN products. The T-REX 550L Dominator is the latest technology in Rotary RC models. Please read this manual carefully before assembling and flying the new T-REX 550L Dominator helicopter. We recommend that you keep this manual for future reference regarding tuning and maintenance.

承蒙閣下選用亞拓遙控世界系列產品，謹表謝意，進入遙控世界之前必須告訴您許多相關的知識與注意事項，以確保您能夠在學習的過程中較得心應手，在開始操作之前，請務必詳閱本說明書，相信一定能夠給您帶來極大的幫助，也請您妥善保管這本說明書，以作為日後參考。

1.INTRODUCTION 簡介

Thank you for buying ALIGN Products. The T-REX 550L Dominator Helicopter is designed as an easy to use, full featured Helicopter R/C model capable of all forms of rotary flight. Please read the manual carefully before assembling the model, and follow all precautions and recommendations located within the manual. Be sure to retain the manual for future reference, routine maintenance, and tuning. The T-REX 550L Dominator is a new product developed by ALIGN. It features the best design available on the Micro-Heli market to date, providing flying stability for beginners, full aerobatic capability for advanced fliers, and unsurpassed reliability for customer support.

感謝您購買本產品，為了讓您順利安全的使用 T-REX 550L Dominator 直升機，請仔細閱讀說明書內基本說明與之建議事項後方開始組裝與操作遙控直升機，同時請妥善保存說明書以備日後查詢與保養調校參考。T-REX 550L Dominator 是目前市場上最新的產品，不論您是初學者或是進階飛行者，T-REX 550L Dominator 皆能提供最佳的飛行穩定性與保障性能及卓越的飛行表現。

WARNING LABEL LEGEND 警告標示說明

FORBIDDEN 禁止	Do not attempt under any circumstances. 在任何情況下，請勿嘗試操作。
WARNING 警告	Mishandling due to failure to follow these instructions may result in damage or injury. 因未遵守說明書內容，而使用錯誤可能造成財產損失或人身傷害。
CAUTION 注意	Mishandling due to failure to follow these instructions may result in danger. 因未遵守說明書內容，而使用錯誤可能造成危險。

IMPORTANT NOTES 重要說明

R/C helicopters, including the T-REX 550L Dominator are not toys. R/C helicopter utilize various high-tech products and technologies to provide superior performance. Improper use of this product can result in serious injury or even death. Please read this manual carefully before using and make sure to be conscious of your own personal safety and the safety of others and your environment when operating all ALIGN products. Manufacturer and seller assume no liability for the operation or the use of this product. This product is intended for use only by adults with experience flying remote control helicopters at a legal flying field. After the sale of this product we cannot maintain any control over its operation or usage.

As the user of this product, you are solely responsible for operating it in a manner that does not endanger yourself and others or result in damage to the product or the property of others.

T-REX 550L Dominator 直升機為模型玩具，它使用許多高科技產品與技術以提供卓越表現。若以錯誤方式操作本產品可能會造成嚴重傷害或死亡，請仔細閱讀本說明書內容，並確保您在操作本產品時的安全，以及！在周圍環境的安全。注意！在周圍環境的安全。製造商及經銷商對於產品的操作或使用不負任何責任。本產品僅限具有遙控直升機操作經驗的成人使用。本產品銷售後，製造商及經銷商無法控制產品的操作或使用。

產品本身是否可飛行，您一定要一定以您自己操作產品行為負責任的成人。

We recommend that you obtain the assistance of an experienced pilot before attempting to fly our products for the first time. A local expert is the best way to properly assemble, setup, and fly your model for the first time. The T-REX 700L DOMINATOR HV requires a certain degree of skill to operate, and is a consumer item. Any damage or dissatisfaction as a result of accidents or modifications are not covered by any warranties and cannot be returned for repair or replacement. Please contact our distributors for free technical consultation and parts at discounted rates when you experience problems during operation or maintenance. As Align Corporation Limited has no control over use, setup, final assembly, modification or misuse, no liability shall be assumed nor accepted for any resulting damage or injury. By the act of use, setup or assembly, the user accepts all resulting liability.

2.SAFETY NOTES 安全注意事項

CAUTION 注意

- Fly only in safe areas, away from other people. Do not operate R/C aircraft within the vicinity of homes or crowds of people. R/C aircraft are prone to accidents, failures, and crashes due to a variety of reasons including, lack of maintenance, pilot error, and radio interference. Pilots are responsible for their actions and damage or injury occurring during the operation or as of a result of R/C aircraft models.
- Prior to every flight, carefully check rotorhead spindle shaft screws and tail blade grip screws, linkage balls and screws, ensure they are firmly secured.

- 遙控模型飛機，應於無障礙物的地方飛行，飛行時應遠離人群，人為的錯誤不當或操作疏忽，電子設備干擾，以及設備上的不良，都有可能會發生失控墜機等不可預期的狀況，請飛行者務必注意飛行安全，並確保自己操作遙控直升機模型之責任。
- 每次飛行前請仔細檢查，主旋翼軸主軸螺絲，尾槳夾頭螺絲，以及連桿球頭螺絲，確保一切確實鎖緊可安全飛行。

LOCATE AN APPROPRIATE LOCATION 選擇適當場地

R/C helicopters fly at high speed, thus posing a certain degree of potential danger. Choose a legal flying field consisting of flat, smooth ground without obstacles. Do not fly near buildings, high voltage cables, or trees to ensure the safety of yourself, others and your model. For the first practice, please choose a legal flying field. Do not fly your model in inclement weather, such as rain, wind, snow or darkness.

直升機因飛行時速很高，相對的也帶有一定的潛在危險性。選擇合法飛行場地，場地平坦光滑無障礙物。遠離建築物、高壓電線、樹木等等，避免傷害自己、他人及模型。第一次練習請選擇合法飛行場地。
請勿在下雨、刮風等惡劣天候下操作，以確保本身及模型的安全。

NOTE ON LITHIUM POLYMER BATTERIES 鋰聚電池注意事項

Lithium Polymer batteries are significantly more volatile than alkaline or Ni-Cd/Ni-MH batteries used in RC applications. All manufacturer's instructions and warnings must be followed closely. Mishandling of Li-Po batteries can result in fire. Always follow the manufacturer's instructions when disposing of Lithium Polymer batteries.

鋰聚電池與一般在RC使用的鹼性電池、鎳鎘電池、鎳氫電池比較起來是相對的危險的，請嚴格遵守廠製商提供的產品使用注意事項，不當操作使用鋰聚電池，可能造成火災發生及生命財產安全，後果大幅！

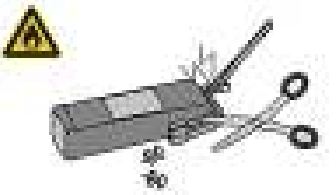

PREVENT MOISTURE 避免潮濕環境

R/C models are composed of many precision electrical components. It is critical to keep the model and associated equipment away from moisture and other contaminants. The introduction or exposure to water or moisture in any form can cause the model to malfunction resulting in loss of use, or a crash. Do not operate or expose to rain or moisture.

直升機內部由許多精密的電子零件組成，所以必須將模型和相關設備遠離水氣，避免任何污染物侵入。任何水氣進入機體內部或接觸機件及電子零件都會引發機件故障不可控制的後果！

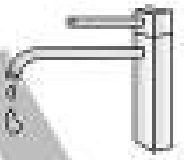

PROPER OPERATION 遵守操作說明書

Please use the replacement of parts on the manual to ensure the safety of instructors. This product is for R/C model, so do not use for other purpose.

請按照說明書操作，使用說明書內的零件更換，請勿自行拆卸零件或改裝零件，以確保使用者的安全。
這產品是用來作遙控模型，請勿作其他用途。

OBTAIN THE ASSISTANCE OF AN EXPERIENCED PILOT 尋求有經驗的指導

Before turning on your model and transmitter, check to make sure no one else is operating on the same frequency. Frequency interference can cause your model, or other models to crash. The guidance provided by an experienced pilot will be invaluable for the assembly, binding, trimming, and actual first flight or unforeseen danger may happen. (Recommend you to practice with computer-based flight simulator.)

開機前請檢查周圍，確認沒有其他人使用相同頻率的遙控器在飛行。因為干擾會導致您的模型或其他模型墜毀。第一次的飛行，建議尋求有經驗的人士在旁指導，才可以順利飛行，否則可能造成不可預期的後果發生。(建議使用模擬器做練習後再進入實機飛行。)

SAFE OPERATION 安全操作

Operate this unit within your ability. Do not fly under tired condition and improper operation may cause in danger. Never take your eyes off the model or leave it unattended while it is turned on. Immediately turn off the model and transmitter when you have landed the model.

請勿自己能力範圍外操作，不要在疲勞狀態下操作，錯誤操作，請勿離開視線不管模型，飛行後立即關閉模型與遙控器，不要在模型處於運行狀態下，隨意離開現場或遠離模型。

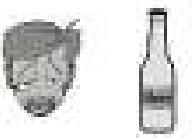

ALWAYS BE AWARE OF THE ROTATING BLADES 注意旋轉中零件

During the operation of the helicopter, the main rotor and tail rotor will be spinning at a high rate of speed. The blades are capable of inflicting serious bodily injury and damage to the environment. Be conscious of your actions, and careful to keep your face, eyes, hands, and loose clothing away from the blades. Always fly the model a safe distance from yourself and others, as well as surrounding objects.

直升機主旋翼與尾旋翼運轉時會以高轉速下操作，在飛行過程中如因操作不當造成傷害他人及物體上的損壞，請勿觸碰運轉中的主旋翼與尾旋翼，並保持安全與離開人群及周圍物體。

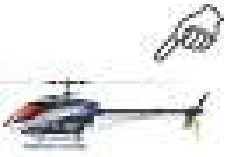

KEEP AWAY FROM HEAT 遠離熱源

R/C models are made of various forms of plastic. Plastic is very susceptible to damage or deformation due to extreme heat and cold climate. Make sure not to store the model near any source of heat such as an oven, or heater. It is best to store the model indoors, in a climate-controlled, room temperature environment.

遙控模型多採用以PA塑膠與聚乙烯、電子產品為主要材料，因此要避免過度熱源、日曬、以及發熱高溫環境，建議保存於室內常溫。

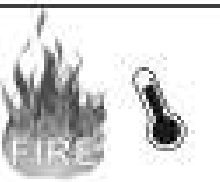

3.EQUIPMENT REQUIRED FOR ASSEMBLY 自備設備

ALIGN

RADIO TRANSMITTER AND ELECTRONIC EQUIPMENT REQUIRED FOR ASSEMBLY 自備遙控器與電子設備

Receiver(7-channel or more)

Remote receiver

Transmitter
(7-channel or more helicopter system)

Intelligent Balance Charger RCC-40X

ADDITIONAL TOOLS REQUIRED FOR ASSEMBLY 自備工具

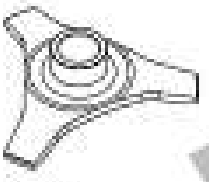

Swashplate Leveler

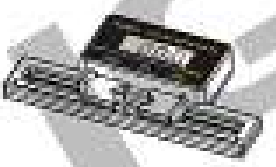

Digital Pitch Gauge

Multi-function Tester
Voltmeter/Servo Diagnosis

Philips Screw Driver
φ3.0/φ1.8mm

Cutter Knife

Hexagon Screw Driver

Needle Nose Pliers

Oil

CA

4.PACKAGE ILLUSTRATION 包裝說明

ALIGN

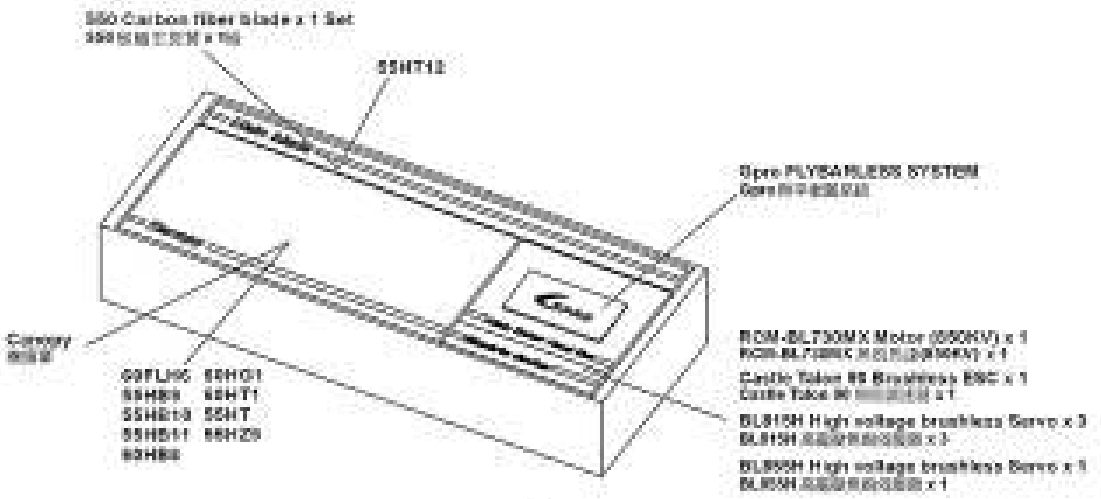

CAREFULLY INSPECT BEFORE REAL FLIGHT 實際飛行前仔細檢查

- Before flying, please check to make sure no one else is operating on the same frequency for the safety.
- Before flight, please check if the batteries of transmitter and receiver are enough for the flight.
- Before turn on the transmitter, please check if the throttle stick is in the lowest position, IDLE switch is OFF.
- When turn off the unit, please follow the power on/off procedure. Power ON- Please turn on the transmitter first, and then turn on receiver. Power OFF - Please turn off the receiver first and then turn off the transmitter. Improper procedure may cause out of control, so please to have this correct habit.
- Before operation, check every movement is smooth and directions are correct. Carefully inspect servos for interference and broken gear.
- Check for missing or loose screws and nuts. See if there is any cracked and incomplete assembly of parts. Carefully check main rotor blades and rotor holders. Broken and premature failures of parts possibly cause resulting in a dangerous situation.
- Check all ball links to avoid excess play and replace as needed. Failure to do so will result in poor flight stability.
- Check if the battery and power plug are fastened. Vibration and violent flight may cause the plug loose and result out of control.

- 飛行前請檢查無其他人使用相同頻率，以確保飛行安全。
- 飛行前請檢查發射機與接收機電池是否電力充足。
- 開機前請檢查油門搖桿是否在最低位置，怠速開關(IDLE)是否在關閉位置。
- 關機時請依照開機程序，開機時請先開發射機，再開接收機電源；關機時請先關閉接收機，再關閉發射機電源。不正確的開關程序可能會造成失控的現象，請養成正確的習慣。
- 開機後先確認各舵機動作是否順暢，確認舵機正常，並檢查舵機是否有干涉或損壞的情形。
- 檢查螺絲是否有缺少、鬆脫的現象與損壞，確認各零件組合不完整或損壞的零件，特別檢查主旋翼與旋翼頭有無裂痕；若發現有上述情形，請更換損壞不完整的零件不適當的零件，使用過此不完整的零件可能會造成危險。主旋翼與旋翼頭是飛行中最重要的安全部件，請確認是否有裂痕、變形、損壞的情況，請確認是否飛行前檢查安全。
- 檢查所有的連桿頭是否有鬆動的情形，鬆動的連桿頭會影響飛行穩定，若有鬆動情形請更換新的零件。
- 檢查電池與電源線是否固定牢靠，飛行中的震動或激烈的飛行，可能造成電源線脫落造成失控的情形。

STANDARD EQUIPMENT 標準配備

When you see the marks as below, please use glue or grease to ensure flying safety.

請為以下所標之處塗抹膠、油脂以上膠或上油，以確保飛行安全。

CA : Apply CA Glue to fix.
AB : Apply AB Glue to fix.
R45 : Apply Anaerobics Retainer to fix.
T43 : Apply Thread Lock to fix.
OIL : Add Grease.

CA : 使用瞬間膠固定
AB : 使用AB膠固定
R45 : 使用厭氣性固定劑(軸承固定)
T43 : 使用螺絲膠
OIL : 添加潤滑油

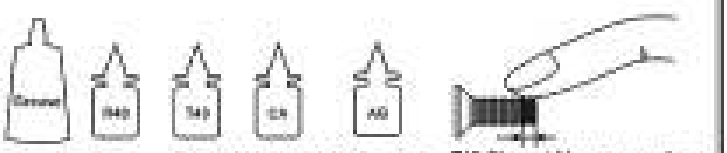

Grease 潤滑油 | Green 綠色 | Blue 藍色 | Instantaneous 瞬間膠(強效) | Instantaneous AB膠(強效)

R45 metal tubular adhesive (eg. Bearings). T43 thread lock, apply a small amount on screws or metal parts and wipe surplus off. When disassembling, recommend to heat the metal joint about 15 Seconds. (NOTE : Keep plastic parts away from heat.)

R45 金屬管狀膠(如軸承)安裝用。T43 螺絲膠，適合螺絲或金屬內部螺絲的少量使用，並擦拭掉多餘的膠劑。拆卸金屬接合部位時建議加熱約 15 秒。(注意！塑膠件請遠離熱源)

When assembling ball links, make sure the "A" character faces outside.

安裝球頭連桿時請注意，A字朝外。

60FLH6

Apply a little amount of T42 thread lock when fixing a metal part.

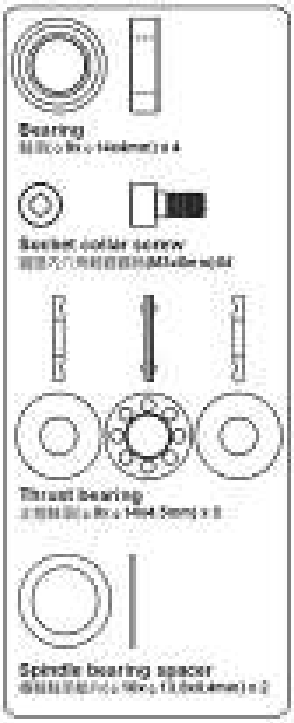

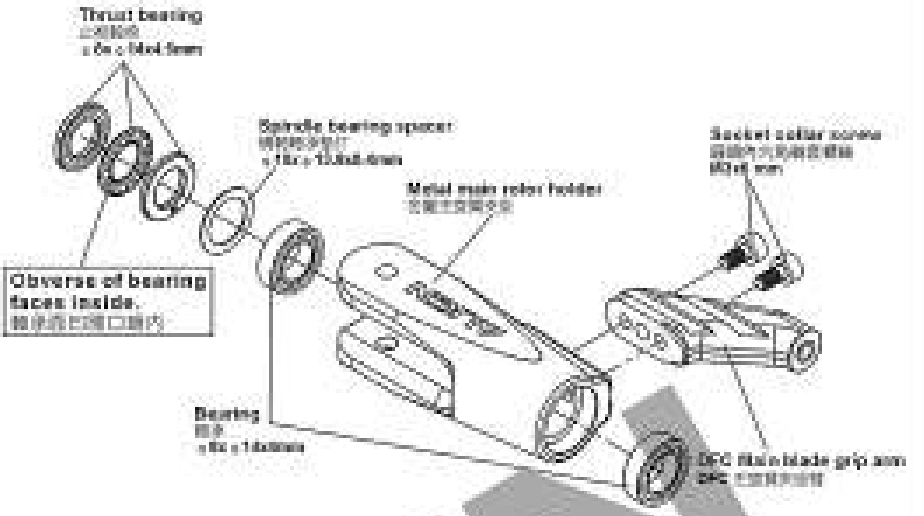

CAUTION

Already assembled by Factory. Before flying, please check if the screws are fixed with glue.

CAUTION

Thrust bearing and washer for radial bearing are wear items, and thus should be inspected for replacement after every 20 flights.
For flights with high headspeed, the inspection interval should be reduced to ensure flight safety.

CAUTION

Apply grease on thrust bearing.

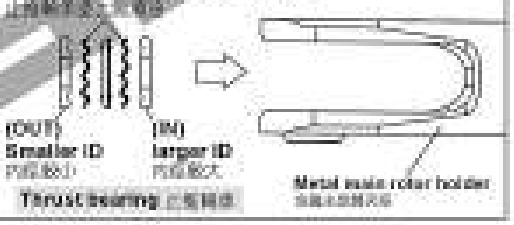

60FLH6

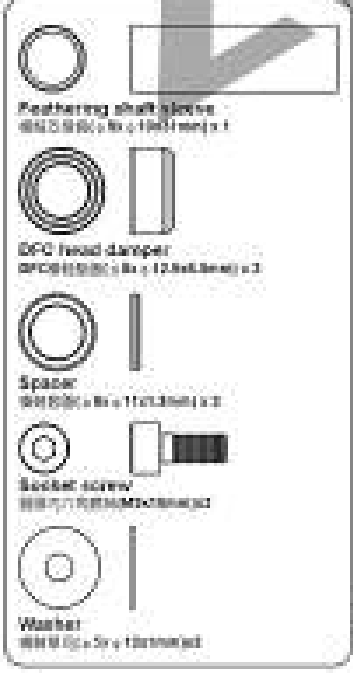

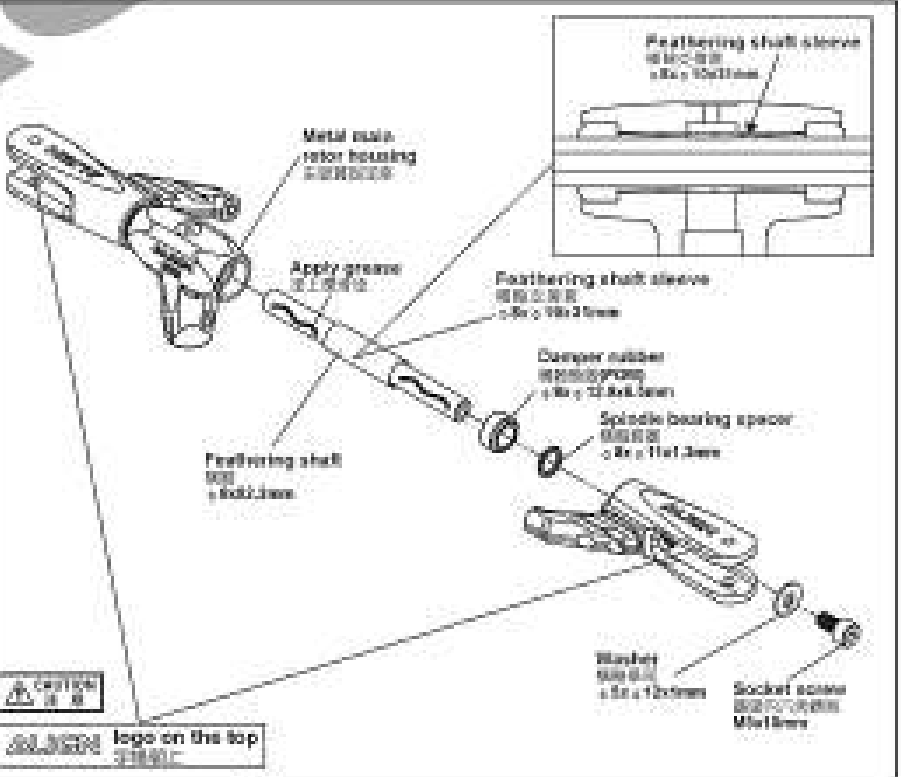

55FLH6

Linkage ball B(M3x4)

Linkage ball D(M3x3.5)

Long linkage ball(M3x4)

Apply a little amount of T42 thread lock when fixing a metal part.

Already assembled by Factory. Before flying, please check if the screws are fixed with glue.

When tightening a screw to a plastic part, please tighten it firmly, but not over tightened, or they will strip.

Linkage ball B(M3x4)

Use the inner hole

DFC CCPM Swashplate

Long linkage ball (M3x4)

Linkage ball D(M3x3.5)

60FLH4A

Bearing

Washer

700DFC Collar

700 DFC Links rod(A)

Socket screw

M3 Nut

Socket collar screw

Socket collar screw

Socket collar screw

Head stopper

Socket screw

Washer

Main rotor grip/linkage bearing sleeve

Bearing

Main rotor grip arm integrated control linkage

700 DFC Links rod(A)

700 DFC Collar

Elevator ball link

M3 Nut

Main shaft

Make sure the linkage rod A is completely fastened with main rotor grip arm integrated control link and apply a little amount of 648 thread lock to avoid any vibration and loose fitted during flight and cause it broken.

You may adjust the length of ball link when tracking is off while flight.

60FLH6

Elevator ball link

60FLH6

Socket collar screw

55HB10

Socket collar screw
M3x8mm x 4

Bearing
ø10 x ø16 x ø5mm x 2

Socket collar screw
M3x6mm x 16

Socket screw
M3x8mm x 2

Bearing
ø8 x ø12mm x 1

DFC canopy mounting bolt
6 x 14.5mm x 4

Socket button head screw
M3x6mm x 3

55HZ8

Socket screw
M4x10mm x 4

M4 Washer
ø4 x ø8mm x 4

M4 Set screw
M4 x 3mm x 2

Motor

Motor mount

M4 Set screw
M4 x 3mm

M4 Washer
ø4 x ø8mm

Motor stand thread pinion gear

Socket screw
M4x8mm

CAUTION

Make sure the motor mount is fully tightened before fasten the motor pinion gear mount.

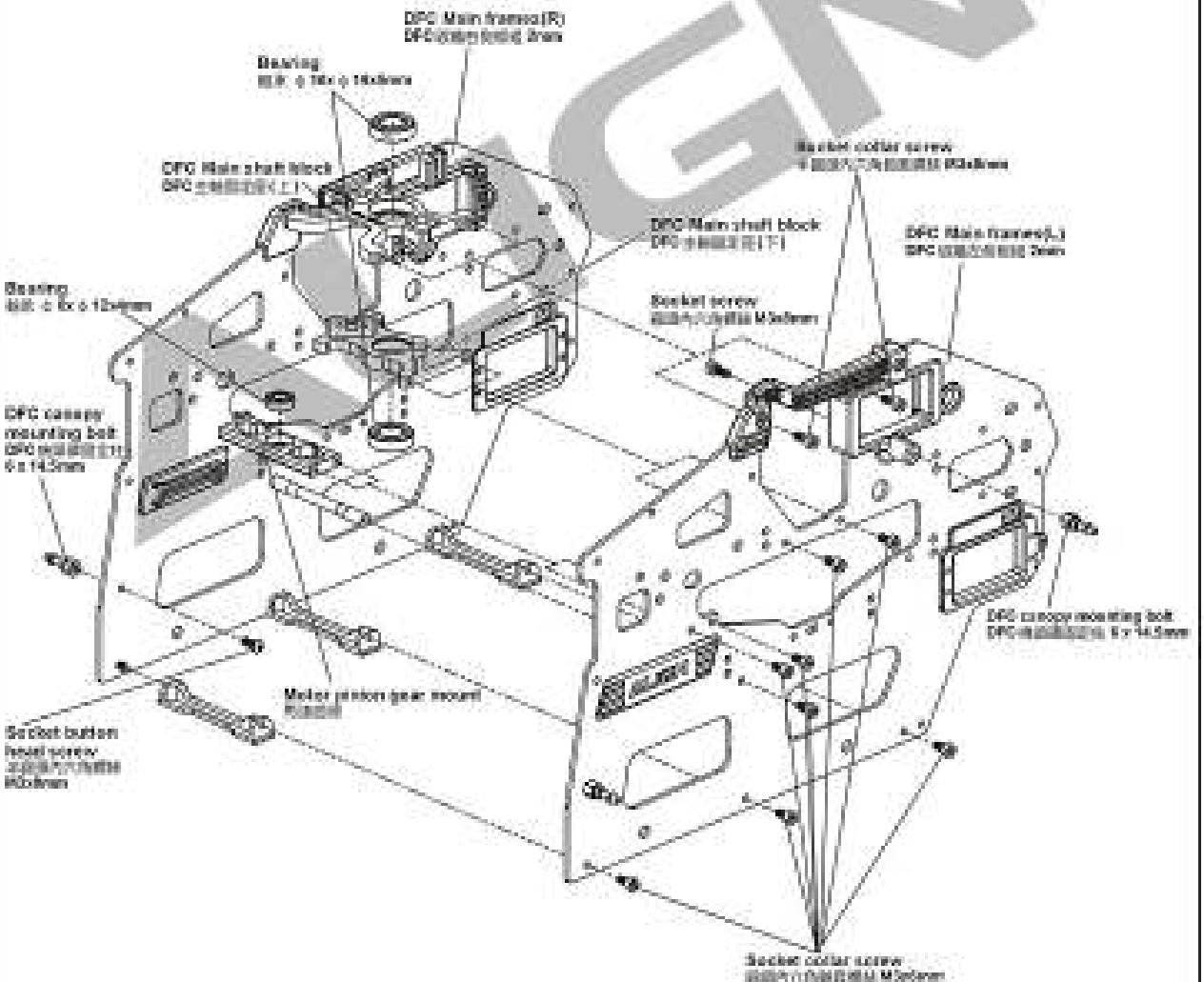

Apply a little amount of T43 thread lock when fixing a metal part.

CAUTION 注意

Main frame assembly key point：

First do not fully tighten the screws of main frames and put two bearings through the main shaft to check if the movements are smooth. The bottom bracket must be firmly touched the level table top(glass surface)；please keep the smooth movements on main shaft and level bottom bracket, then slowly tighten the screws. This assembly can help for the power and flight performance.

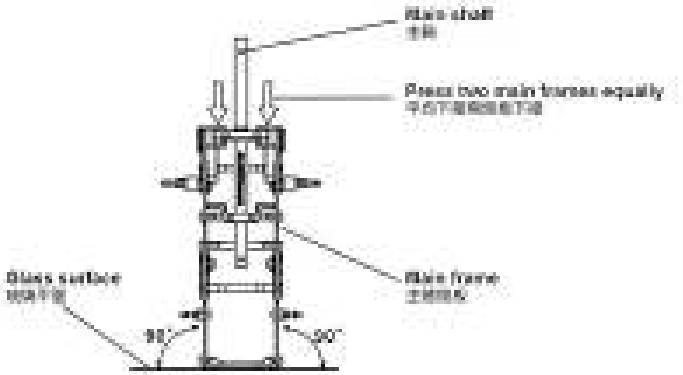

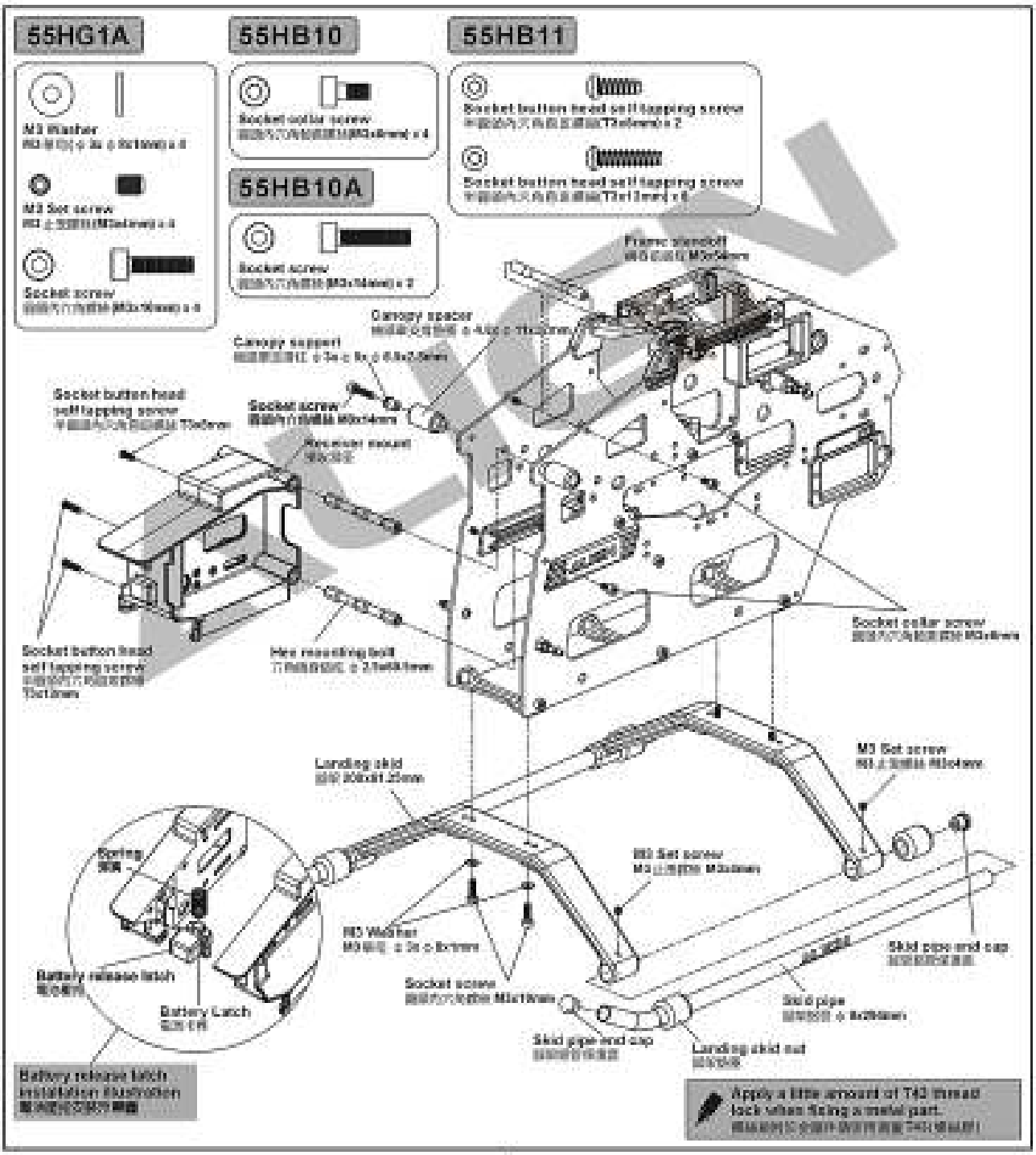

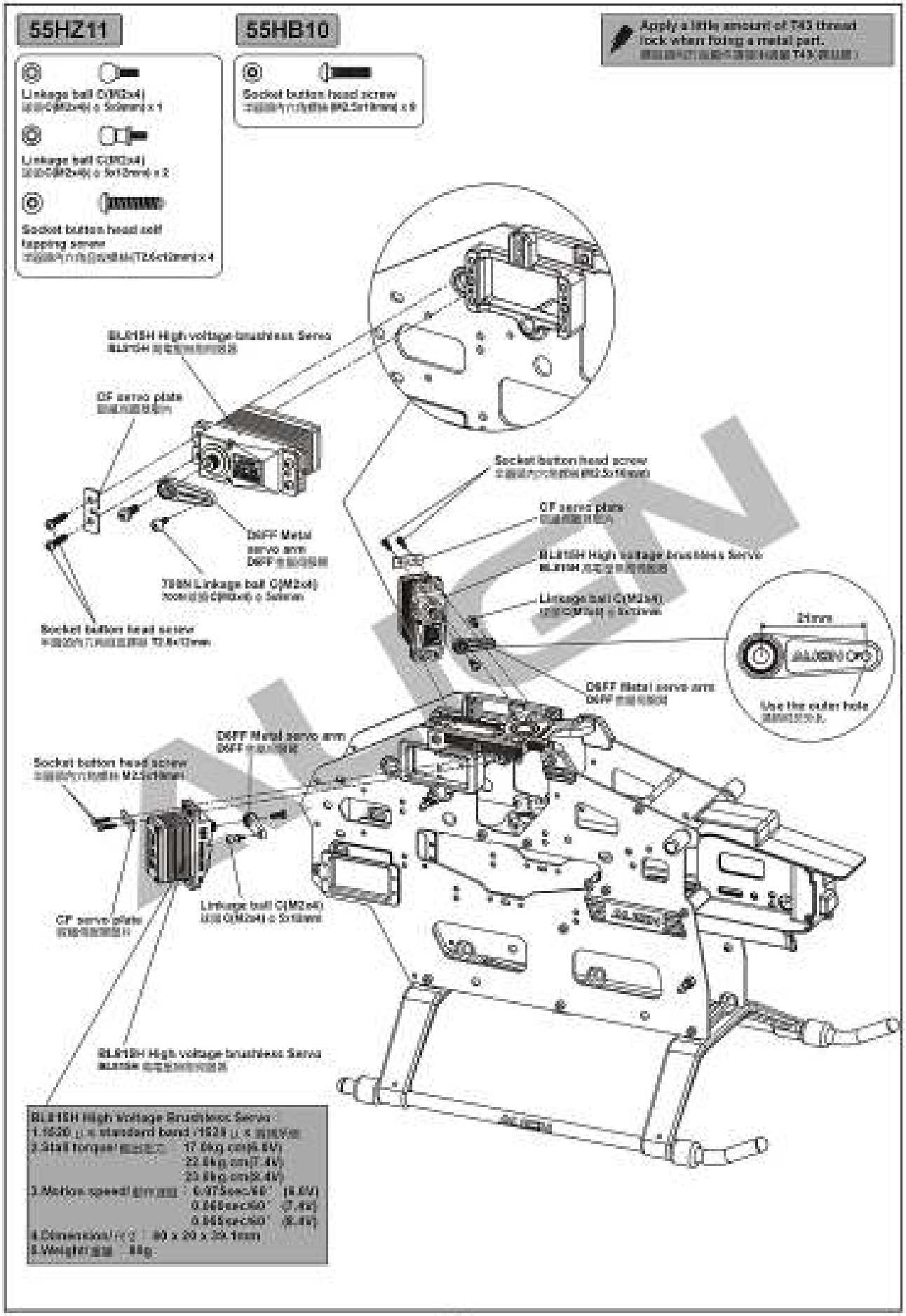
55HZ11
55HB10
Apply a little amount of 243 thread lock when fixing a metal part.
Linkage ball C(M2x4)
Linkage ball C(M2x4)
Socket button head self tapping screw
Socket button head screw
BLS15H High voltage brushless Servo
CF servo plate
D6FF Metal servo arm
D6FF
7BBN Linkage ball C(M2x4)
Socket button head screw
Socket button head screw
CF servo plate
BLS15H High voltage brushless Servo
Linkage ball C(M2x4)
21mm
D6FF Metal servo arm
D6FF
Use the outer hole
D6FF Metal servo arm
D6FF
Socket button head screw
CF servo plate
Linkage ball C(M2x4)
BLS15H High voltage brushless Servo
BLS15H High Voltage Brushless Servo:
1.1020 μ s standard band /1520 μ s
2.Stall torque : 17.0kg·cm(6.0V)
22.0kg·cm(7.4V)
23.0kg·cm(8.4V)
3.Motion speed : 0.075sec/60° (6.0V)
0.065sec/60° (7.4V)
0.063sec/60° (8.4V)
4.Dimension : 40 x 20 x 36.1mm
5.Weight : 64g

55HB10

Socket button head collar screw
内六角圆柱头螺丝(M3x8mm) x 4

55HZ11

Linkage ball A(M2x3.5)
连杆A(M2x3.5) x 4.75x6.16mm x 1

M2 Nut
M2螺母 x 1

Socket button head self tapping screw
内六角圆柱头自攻螺丝(T2.6x12mm) x 4

Recommend sanding the marked position as below illustration with a waterproof abrasive paper(#600-1000) to avoid the wires of electric parts to be cut.
建议按下图标记位置用砂纸（#600-1000）打磨，以防止电子部件线材被割断。

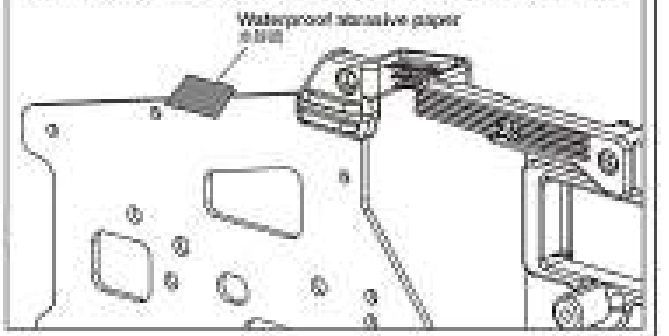

Apply a little amount of T43 thread lock when fixing a metal part.
在金属件上安装时涂抹少量T43螺纹胶

CAUTION 注意

Make sure the motor mount is fully fastened before fasten the motor pinion gear mount.
安装电机齿轮组件之前，请确保电机安装座已紧固。

While assembling the motor mount, please make sure to properly loose M4 Set screw on 16T motor gear first, after fully fastens the motor mount with the motor pinion, then fastern back the M4 Set screw completely.
安装电机座时，请先松开16T电机齿轮上的M4Set screw 止动螺丝适当松动，待电机座安装好电机齿轮后，再将电机齿轮上止动螺丝紧固。

Motor
电机

Motor Mount
电机安装座

BLS55H High Voltage Brushless Servo：
1.1/12 μ s standard band /1/20 μ s
2.Stall torque/扭矩(3.7)：9.6kg.cm(6.0V)
10.8kg.cm(7.4V)
12.5kg.cm(8.4V)
3.Motion speed/ 操作速度：0.04sec/60°(6.0V)
0.03sec/60°(7.4V)
0.029sec/60°(8.4V)
4.Dimension/尺寸：40 x 20 x 39.1mm
5.Weight/重量：74g

Servo extension cable
伺服延长线

150mm

For extend the rudder servo signal cable.
用于延长舵机信号线

BLS55H High voltage brushless Servo
BLS55H 高压无刷伺服舵机

M2 Nut
M2螺母

Linkage ball A(M2x3.5)
连杆A(M2x3.5) x 4.75x6.16mm

3K CF servo plate
3K碳纤维舵机板

Socket button head self tapping screw
内六角圆柱头自攻螺丝(T3.4x12mm)

Socket button head collar screw
内六角圆柱头螺丝(M3x8mm)

CAUTION 注意

Please trim away the other servo horns, and fasten linkage ball on the outer second hole.
请为舵机臂的十字连杆的内侧孔安装连杆球头，并将连杆球头安装在外侧第二孔。

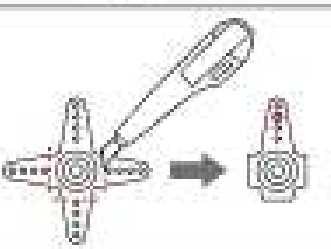

60HT1

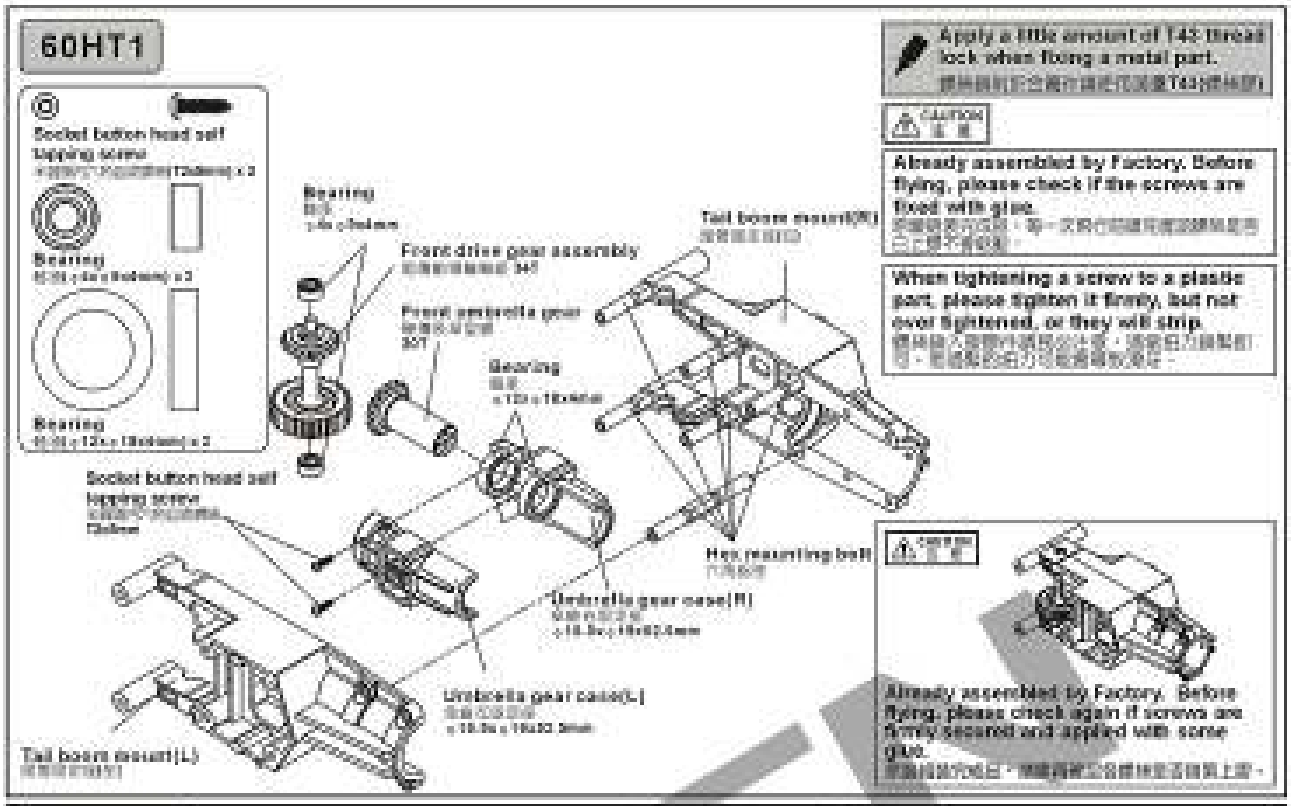

60HT6

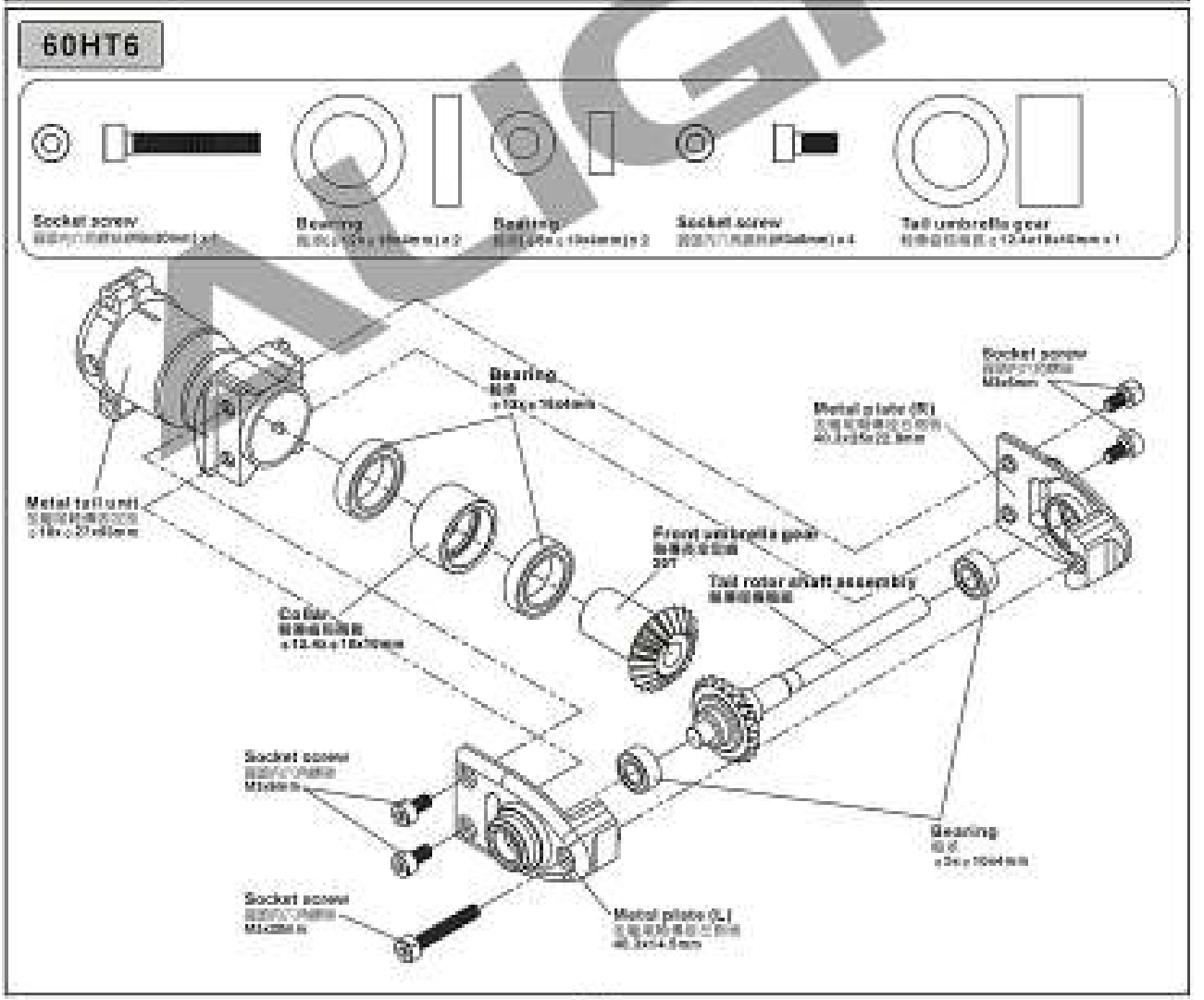

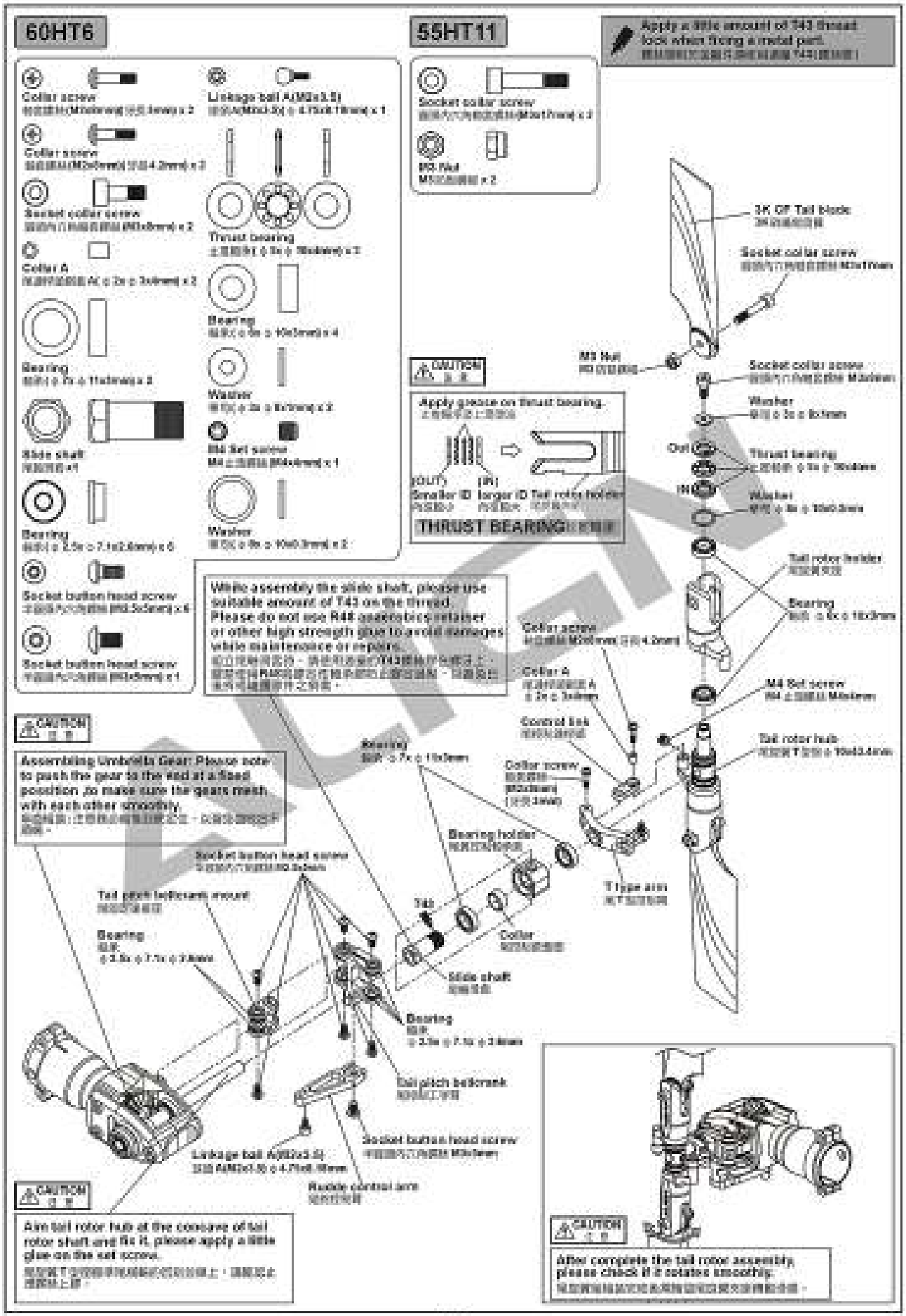
60HT6
55HT11
Apply a little amount of 243 thread lock when fixing a metal part.
Collar screw
Linkage ball A(M2x3.5)
Collar screw
Socket collar screw
Thrust bearing
Collar A
Bearing
Bearing
Washer
Slide shaft
M4 Set screw
Bearing
Washer
Socket button head screw
Socket button head screw
Socket collar screw
M3 Nut
3K Off Tail blade
Socket collar screw
M3 Nut
Socket collar screw
Washer
Out
Thrust bearing
IN
Washer
CAUTION
Apply grease on thrust bearing.
(OUT) Smaller ID
(IN) larger ID Tail rotor holder
THRUST BEARING
Tail rotor holder
Bearing
Collar screw
Collar A
M4 Set screw
Control link
Tail rotor hub
Bearing
Collar screw
Bearing holder
T type arm
While assembly the slide shaft, please use suitable amount of 243 on the thread. Please do not use R48 anaerobics sealant or other high strength glue to avoid damages while maintenance or repairs.
CAUTION
Assembling Umbrella Gear: Please note to push the gear to the end at a fixed position ,to make sure the gears mesh with each other smoothly.
Socket button head screw
Tail pitch bellcrank mount
Bearing
Tab
Collar
Slide shaft
Bearing
Tail pitch bellcrank
Socket button head screw
Linkage ball A(M2x3.5)
Rudder control arm
CAUTION
Aim tail rotor hub at the concave of tail rotor shaft and fix it, please apply a little glue on the set screw.
CAUTION
After complete the tail rotor assembly, please check if it rotates smoothly.

When assembling into the tail boom, please apply some oil on the surface, to make it smooth during the assembling and keep it vertical with the torque tube for smooth rotation.

Already assembled by factory, please note to check again.

M3 Nut

Socket screw

Socket self tapping screw

Torque tube

vertical stabilizer mount

When assembling the tail boom, please aim at the fixing hole

600 Ball link

Socket self tapping screw

Stabilizer mount (Upper)

3K CF Horizontal stabilizer

Before assembling, please wrap the tail boom with a scotch tape (Thickness: 0.03~0.05mm)to avoid the mount slipping.

Tail control guide

Aluminum tail boom

Carbon fiber tail control pushrod

Tail boom brace set

Stabilizer mount (Lower)

M4 Washer

Socket screw

M3 Specialty washer

Socket self tapping screw

3K CF vertical stabilizer

600 Ball link

55FLT2A

Bearing

60HT1A

Socket screw

M3 Nut

60HT6

Socket collar screw

Socket screw

M3 Specialty washer

TIP TO FIX THE TORQUE TUBE

Please apply some CA glue to fix bearing on the torque tube, avoid CA glue from the dust or may cause the bearing stack. When assembling into the tail boom, please apply some oil and use the attached torque tube mount helper to press the bearing holder of the torque tube into the tail boom horizontally.

Tail boom

Bearing

CA

Neutral point of torque tube

Torque tube mount helper (PVC packing tube)

Torque tube

Tube front

Tube end

Bearing 5mm or oil inside the tail boom

Bearing 5mm~5.2mm

Torque tube bearing holder

Approx. 20mm

Tail control guide

Carbon fiber tail control pushrod

CA

17.5mm

17.5mm

CAUTION

Sleeved Torque tube bearing holder will interfere with torque tube rotation and cause unusual vibration.

55HT3A

M3 Washer

Socket self tapping screw

55HT12

Ball link

Socket self tapping screw

CAUTION

After moving the tail control rod adjustment sleeve to recommended position, glue the sleeve to carbon tail control rod with instant glue.

Apply a little amount of T42 thread lock when fixing a metal part.

CNC Metal swit rotation bracket

Socket button head screw

55HB10A

M4 Washer

M3 Washer

Socket collar screw

Socket screw

Socket screw

55HB10

Socket button head screw

Socket collar screw

Socket button head screw

Tail boom fixing screw

60HT6

Socket button head screw

Socket screw

Socket screw

60HB6

Bearing

One-way bearing

Washer

Flat head self tapping screw

One-way bearing shaft

CNC Steel thread main drive gear

Washer

Main gear case

Autorotation tail drive gear set

Please fasten the screws to the ø 2.6 holes at the steel main gear.

Flat head self-tapping screw

Bearing

Apply grease

One-way bearing shaft

CAUTION

Already assembled by Factory. Before flying, please check if the screws are fixed with glue.

Before tightening the screw, please rotate the bearing and check the concentricity of the bearing in order to have the screw firmly secured, to avoid the bearing stuck or heavy load at one side and cause slip.

Apply a little amount of T43 thread lock when fixing a metal part.

When tightening the main blade fixing screw, please tighten it firmly, but not over tighten, or it may cause the damage of main blade holder and result in danger.

Socket collar screw
M4x10mm

M4 Nut

500 Carbon Fiber Blades

DFC Metal main

700 DFC Collar

Elevator ball link

Linkage rod(B)
Approx. 44mm x 2
Approx. 26mm x 2

44mm

26mm

Standard Equipment :
Main shaft spacer(0.5)
Main shaft spacer(0.3)

60FLH4A

Main Blade Fixing Screw

Socket collar screw
M4x25mm x 2

M4 Nut
M4 x 1

700FLZ7

Elevator ball link x 4

700 DFC Collar

DFC Linkage rod(B)
DFC x 1

Main shaft

Swashplate Leveler

Horizontally Level

Ring bolts

CAUTION

While using Gpro Flybarless system, please use the swashplate leveler to calibrate swashplate. Adjust the length of servo linkage rod to make sure the swashplate is leveled before start setting up Gpro to ensure Gpro provides the best performance.

M3 Nut

600 PRO Steel thread main drive gear set

Socket collar screw
M3x30mm

The lower edge of main gear need to be lined up with lower edge of pinion gear. This will ensure smooth meshing, and avoid interference between pinion's base and main gear which can lead to unusual wear.

60HB6

Socket collar screw
M3x25mm x 1

M3 Nut
M3 x 1

CAUTION 注意

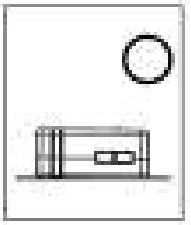

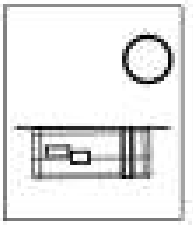

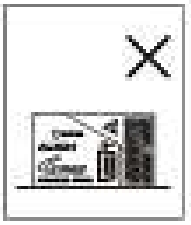

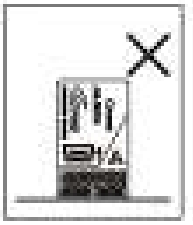

1. Consult the following diagram for Gpro installation direction, with arrow pointing toward nose or tail of helicopter. Gpro needs to be mounted flat on gyro mounting platform, away from vibration sources.
2. Two pieces of foam mounting tape can be used if helicopter experiences vibration induced flight instability. However, if this still doesn't cure the problem, please check the helicopter mechanics and minimize mechanical vibrations, or reduce the headspeed.
3. Please secure with genuine factory issued double sided anti-vibration mounting tape.

1. Gpro機架方向請參照圖示，方向箭頭朝向機頭或機尾，水平安裝於陀螺儀基座上，並遠離震動源。
2. 機體飛行震動造成飛行不穩定，可加Gpro下方雙面泡棉墊高減震，若仍未改善，請檢查機體狀況並減少機械振動，或降低主旋翼轉速。
3. 請使用原廠提供雙面防震泡棉安裝固定。

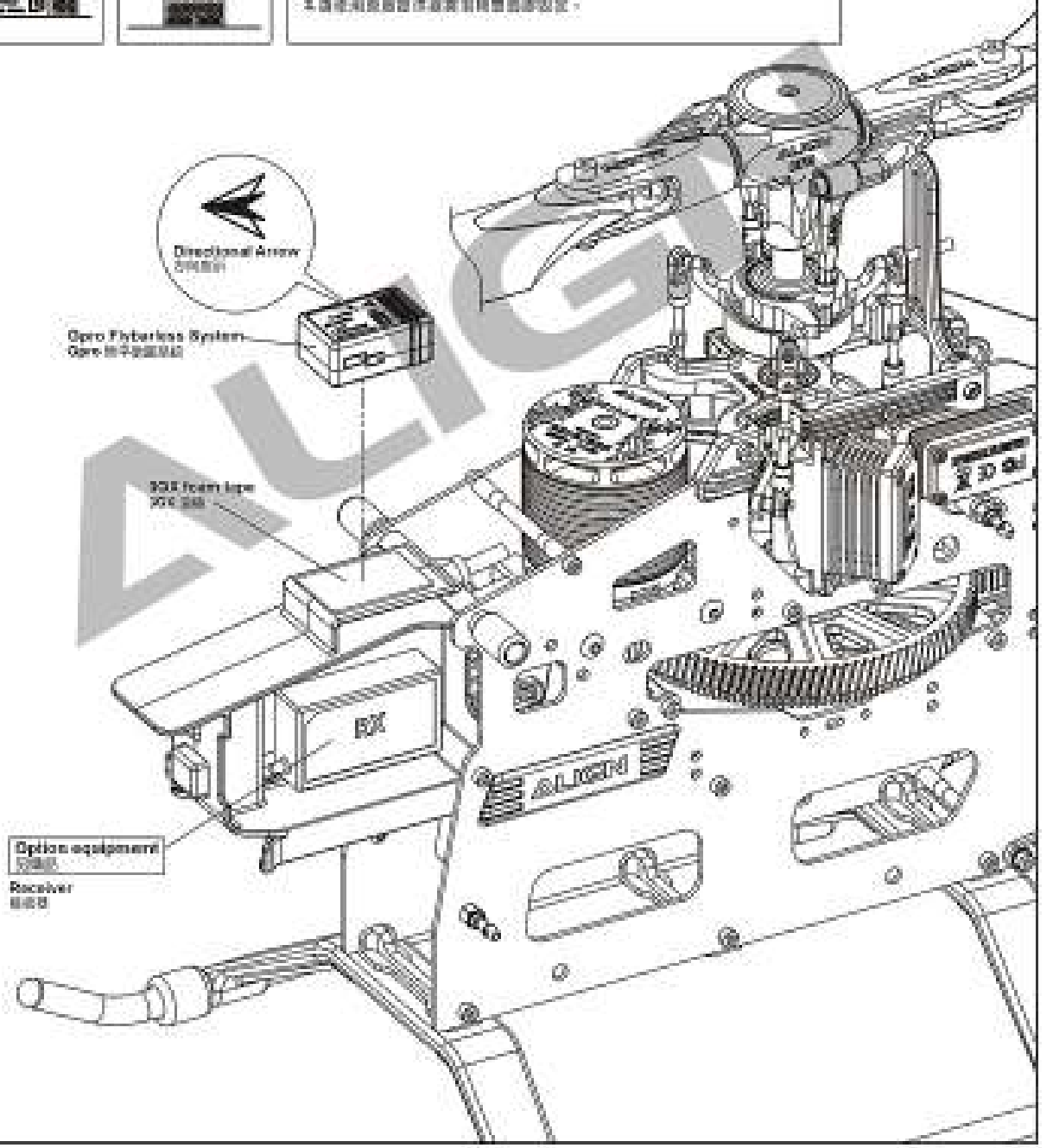

CAUTION 注意

Battery mount

Battery

Hook and Loop Tape

Slide along the rail

Insert the battery from the front

Please fix the battery on the battery mount evenly.

Latch

CAUTION 注意

Slide the battery mounting plate along the rail until a "click" is heard to make sure the battery mounting plate is latched.

Press this latch to allow the battery to slide out along the rail.

Battery release latch

Hook and Loop Tape

9.INSTALLATION FOR ESC 特技調速器安裝

ALIGN

Castle talon 50
brushless esc
Castle talon 50 特技調速器

10.CANOPY ASSEMBLY 機罩組安裝

ALIGN

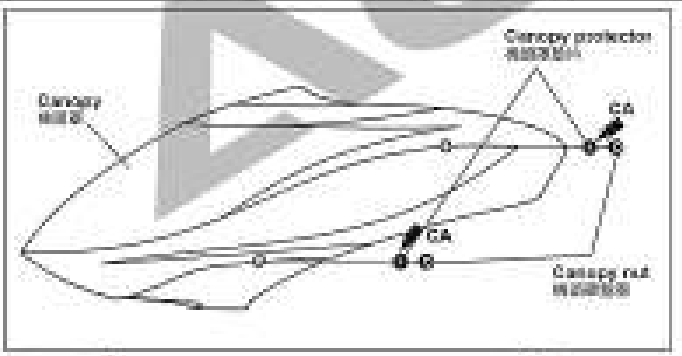

CAUTION 注意

Keep the hole position for canopy mounting bolt horizontally to make it easier to insert the R pin to fix the canopy.
機罩固定螺絲孔位置水平放置有助於插入固定機罩

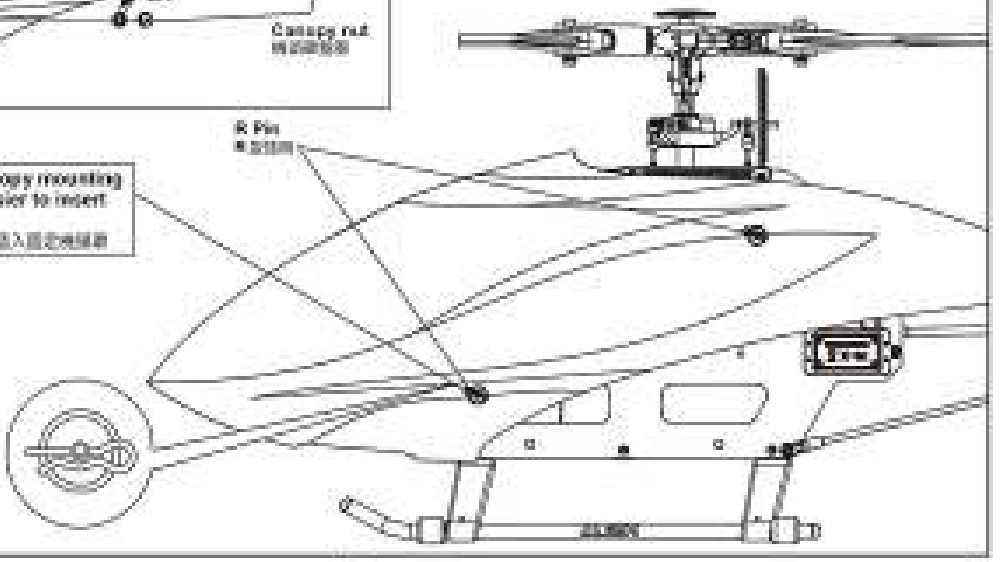

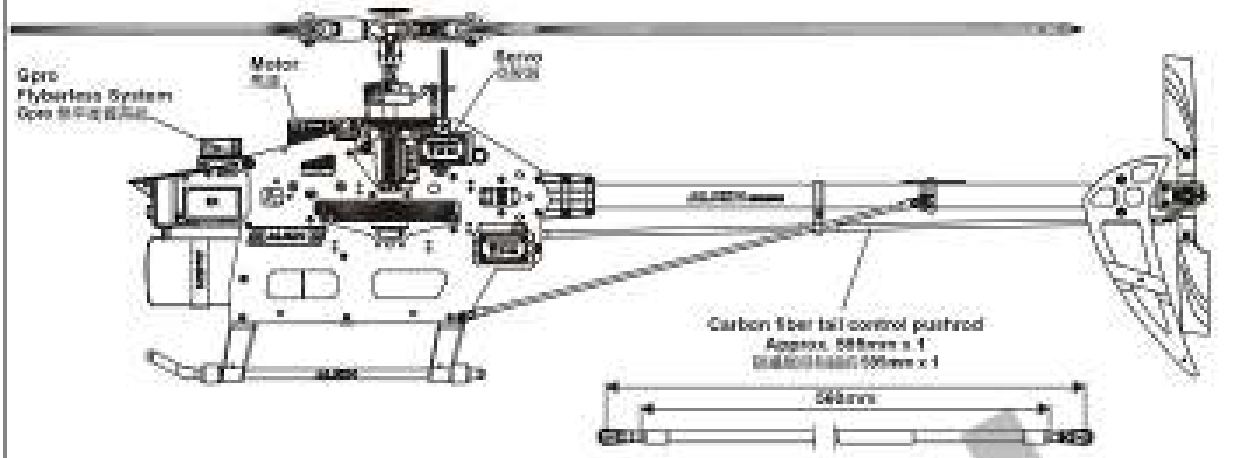

PARTS IDENTIFICATION 零部件識別

Gpro FLYBARLESS SYSTEM Gpro無平尾翼系統

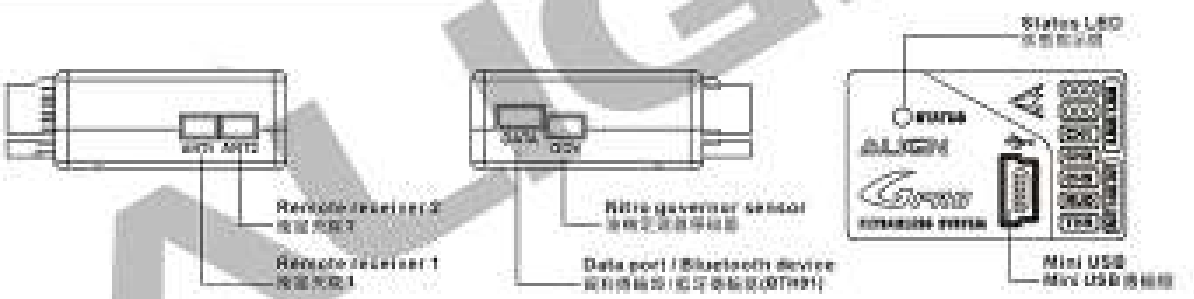

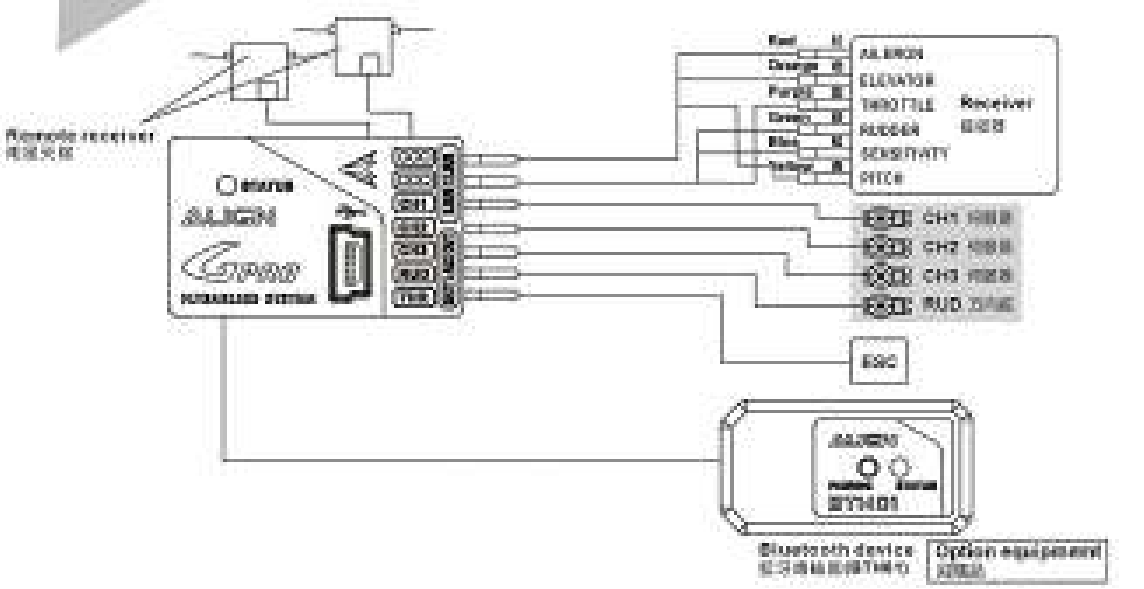

12.SERVO SETTING AND ADJUSTMENT 伺服器設定與調整

To set this option is to turn on the transmitter and connect to BEC power.
Note: For the safety, please do not connect ESC to the brushless motor before the setting in order to prevent any accident caused by the motor running during the setting.
此項設定只需開啟發射機，並上BEC電源即可進行操作。
注意：為了安全起見，設定前請先不要將無刷馬達與電調連接在一起，以免發生意外造成馬達運轉發生意外。

SERVO CONFIGURATION 伺服器配置

1. Following the servo configuration diagram on left, plug the servos to Gpro.
2. When setting up Gpro, select swashplate type:HR-3, 120 degrees CCPM in the PC interface as shown below. For more details please refer to page 22 in Hyperflow system manual.

1.依照左側伺服器配置圖，將伺服器接到Gpro。
2.設定Gpro時，電腦設定介面的十字盤類型請選擇HR-3，120度CCPM，如下圖所示。詳細請參22頁Hyperflow系統說明書。

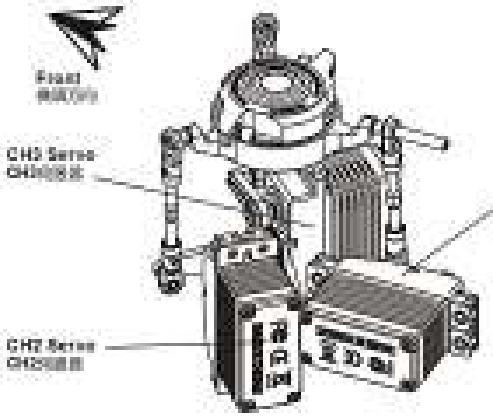

13.ADJUSTMENTS FOR GYRO AND TAIL NEUTRAL SETTING 陀螺儀調整與尾舵中立調整

Turn off Revolution mixing(RVMX) mode on the transmitter, then set the gain switch on the transmitter and the gyro to non-Head lock mode, or disable gain completely. After setting the transmitter, connect the helicopter power and proceed with rudder neutral point setting. Note: When connecting to the helicopter power, please do not touch tail rudder stick and the helicopter, wait for 3 seconds for gyro to enable, and the rudder servo horn should be 90 degrees to the tail servo. Tail pitch slider should be half way on the tail output shaft. This will be the standard rudder neutral point. After completing this setting, set the gain switch back to heading lock mode, with gain at around 70%.

發射器內的轉速混合功能關閉後啟動模式，並將發射機上的增益開關與陀螺儀的增益調整為非鎖頭模式，或完全關閉增益功能。發射機設定完成後接上直升機電源，即可進行尾舵中立點設定。注意：當將直升機電源接通後請勿碰觸尾舵搖桿與直升機，陀螺儀啟動需要三秒鐘，尾舵伺服器與尾舵連接桿呈 90 度，尾滑塊應位於尾舵輸出軸的一半處。這是尾舵的中立點。完成此設定後，請將增益開關調回鎖頭模式，增益設定為 70% 左右。

TAIL NEUTRAL SETTING 尾舵中立點設定

After the gyro is enable and under non-Head lock mode, correct setting position of tail servo and tail pitch assembly is as photo. If the tail pitch assembly is not in the middle position, please adjust the length of rudder control rod to trim.

陀螺儀啟動後，在非鎖頭模式下，尾舵伺服器與尾舵 Pitch 滑塊的位置應如圖所示。如尾 Pitch 滑塊未在中間位置，請調整尾舵控制桿的長度以修正。

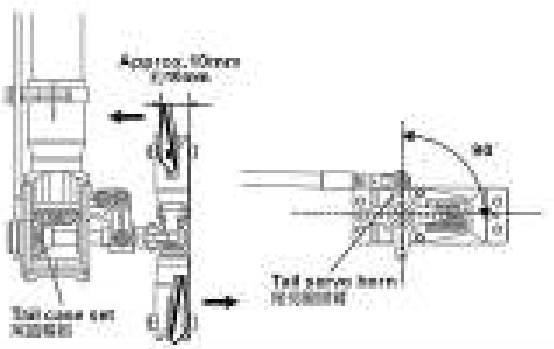

HEAD LOCK DIRECTION SETTING OF GYRO 陀螺儀鎖頭方向設定

To check the head lock direction of gyro is to move the tail clockwise and the tail servo horn will be trimmed counterclockwise. If it trims in the reverse direction, please switch the gyro to "REVERSE".

陀螺儀鎖頭方向檢測，當手動尾舵順時針運動時，尾舵伺服器應向逆時針方向修正。若尾舵伺服器反向修正，請將陀螺儀設定為"REVERSE"。

GENERAL FLIGHT 一般飛行模式

Stick position at high/Throttle 100%/Pitch+12°
搖桿位置在高油門100%/Pitch+12°

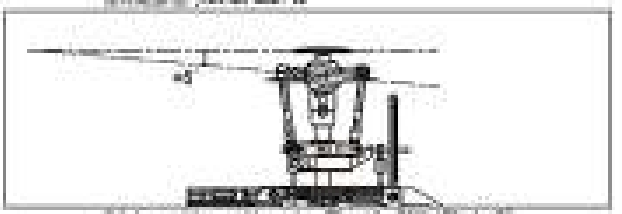

Stick position at Hovering/Throttle 70%/Pitch+5°
搖桿位置在懸停70%/Pitch+5°

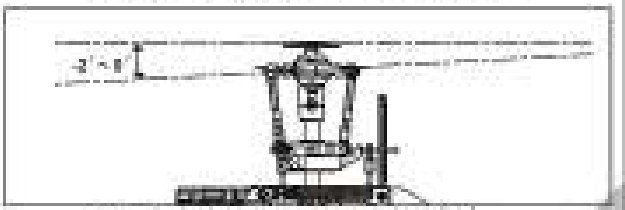

Stick position at low/Throttle 0%/Pitch-2°~0°
搖桿位置在低油門0%/Pitch-2°~0°

GENERAL FLIGHT 一般飛行模式

	Throttle 油門	Pitch 螺距
5	100% High speed 100% 高速	+12°
4	85%	
3	65%~85% Hovering 65%~85% 懸停	+5°
2	40%	
1	0% Low speed 0% 低速	-2°~0°

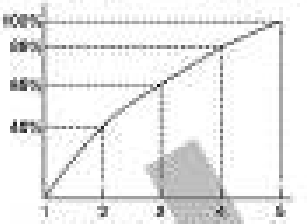

Throttle Curve(Hovering Flight)
油門曲線(懸停飛行)

Pitch and Rotation Speed/ Pitch與轉速關係

TIP:It is recommended to use a lower pitch setting when using higher RPM/head speed. This will allow for better power.
因應轉速、主旋翼螺距與轉速有關係設定之建議值為較低螺距。螺距與轉速成反比關係。

3D FLIGHT 3D模型飛行模式

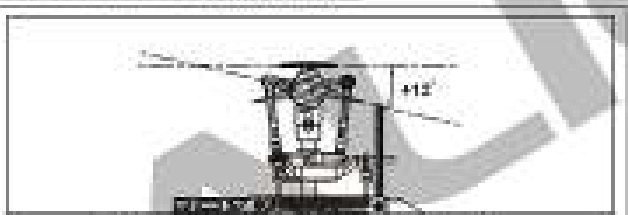

Stick position at high/Throttle100%/Pitch+12°
搖桿位置在高油門100%/Pitch+12°

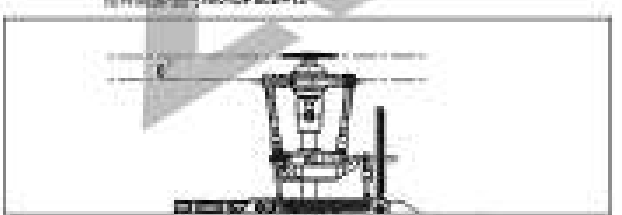

Stick position at middle/Throttle 50%/Pitch 0°
搖桿位置在中間油門50%/Pitch 0°

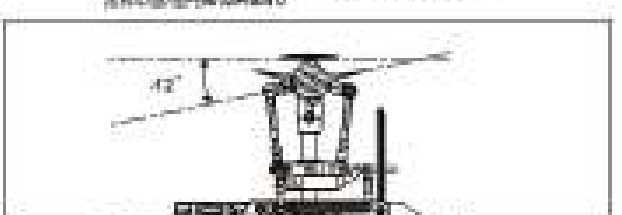

Stick position at low/Throttle 100%/Pitch-12°
搖桿位置在低油門100%/Pitch-12°

IDLE 1:SPORT FLIGHT

	Throttle 油門	Pitch 螺距
6	100%	+12°~+12°
4	75%	
3	70%	+5°
2	75%	
1	80%	-5°

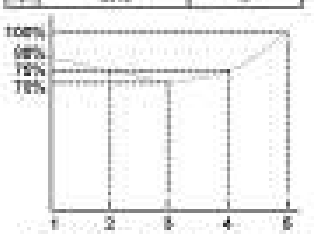

Throttle Curve(Sport Aerobatic Flight)
Sport飛行油門曲線

IDLE 2:3D FLIGHT

	Throttle 油門	Pitch 螺距
6	100% High 100%高	+12°
3	50% Middle 50%中	0°
1	100% Low 100%低	-12°

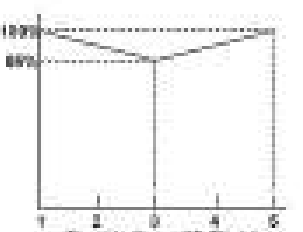

Throttle Curve(3D Flight)
特技飛行油門曲線

⚠ CAUTION 注意

1. Pitch range : Approx. ±16°.
2. If the pitch is set too high, it will result in shorter flight duration and poor motor performance.
3. Setting the throttle to provide a higher speed is preferable to increasing the pitch too high.

1.螺距Pitch最行程約 ±16°。
2.過大螺距設定，會導致動力時間縮短。
3.動力選擇以較高轉速的設定為宜，優於螺距過大的設定。

FEATURES 產品特色

- 3-axis gyroscopic flybarless system to simulate the stability of mechanical flybar system, yet at the same time achieving agile 3D performance.
  3軸陀螺儀無平衡翼系統，模擬機械平衡翼系統的穩定性，並有靈活的3D性能。
- Utilizes MEMS gyro sensors, which feature small footprint, high reliability, and excellent stability.
  採用MEMS（Micro Electro Mechanical Systems）微機電系統技術陀螺儀，具有體積小，可靠性高，穩定性佳的優點。
- Sensor with 12 bit ultra high resolution, resulting in highly precise controls.
  感測器12位元，超高解析度，帶來極精準。
- Brand new CPU processes 20 times faster than previous generation.
  CPU效能提升，運算速度為20倍。
- Utilizes with Bluetooth for phone setup adjust.
  支援藍牙功能，可透過手機設定調整。
- Utilizes with IOS APP for instant adjustment.
  支援IOS手機app即時功能。
- Utilizes with Android APP for instant adjustment.
  支援Android手機app即時功能。
- Supports SPEKTRUM and JR satellite receivers.
  支援SPEKTRUM與JR衛星天線。
- Supports Futaba S.Bus architecture.
  支援Futaba S.BUS功能。
- Supports JR X.Bus architecture.
  支援 JR X.BUS功能。
- Software upgradable through PC interface adapter.
  韌體可升級程式設計介面，可透過轉接線更新韌體。
- Flybarless system dramatically improves 3D power output and efficiency, resulting in reduced fuel or electricity consumption.
  無平衡翼系統，可大幅提升3D表現性能及效能，使耗油量或電池消耗量大幅減少，延長飛行時間。
- Highly sensitive gyroscopic sensors combined with advanced control detection routine providing higher hovering and aerobatic stability than other flybarless system.
  高靈敏陀螺儀搭配先進偵測設計，可提供比一般平衡翼系統更穩定的懸停及特技飛行能力。
- Suitable for all CCPM and mechanical mixing system.
  適用於任何比例之對稱式三伺服器CCPM系統及傳統機械平衡翼系統。
- Built in speed governor function.
  內建轉速穩定器功能。
- Compatible with helicopter of all sizes from T-REX 250 to T-REX 800.
  Gpro Flybarless電子設備相容小型機至T-REX 250大型直升機至T-REX800～T-REX850。
- Capable to operate between 3.5V to 8.4V, compatible with high voltage servos.
  適用電壓3.5V～8.4V，支援高電壓伺服器。
- Small footprint, light weight, minimalists and reliable design.
  體積小，重量輕，簡潔設計穩定，是所有機型都可使用的理想選擇。

SETUP PRE-CHECK 設定前注意事項

CAUTION 注意

While using Gpro FBL system, be sure to turn off the following functions in the transmitter
使用Gpro系統時請記得關閉下列功能的設定與數值功能
★ Swash AFR ★ Linkage Compensation ★ Swash Mix ★ Mixing ★ Acceleration

1. Connect the receiver and servos to the Gpro Flybarless system unit as per diagram found on page 23 ~ 24.
2. Digital servos must be used on cyclic to avoid damage to servos.
   Commended servo spec: minimum speed 0.08 sec/60 degrees, torque 12kg.cm or higher.
3. Prior to first use, please enter setup program through helicopter's Hardware Setup menu, followed by parameter tuning in each tab, then concludes with flight parameter menu settings. Please ensure helicopter's hardware settings has been completed before making changes to flight parameters.
4. Before entering setup mode, all trims on transmitter need to be zeroed. Do not adjust the trim tab while flying. If helicopter experiences drifting during hover, this is an indication that swashplate was not leveled during setup. Should this occurs, please enter the flybarless system "swashplate settings" mode, adjust the level of swashplate, and then complete the setup again.
5. Please unplug motor wires or activate throttle HOLD when performing Gpro configuration. After completing setup, remember to power Gpro back on.
6. Please be sure to disconnect the USB cable and re-power your Gpro after connection with the desktop app, otherwise Bluetooth connection will fail.

1. 將接收器及伺服器依接線示意圖連接（請參閱第23～24頁）。
2. 十字盤必須配備數位伺服器，否則會造成伺服器損壞。 建議規格：速度0.08秒/60度以內；扭力12kg.cm以上。
3. 第一次安裝Gpro Flybarless無平衡翼系統時，請先進行"硬體設定"，並確保"硬件全部設定"，接著一個次元調整參數設定。
4. 進入設定模式前請確認遙控器的所有微調歸零，飛行時不可調整所有微調，若直升機懸停時發生漂移，表示設定前十字盤未調整水平，請進入無平衡翼系統"十字盤調整設定"，調整傾斜盤十字盤至水平後，重新完成設定。
5. 進行Gpro設定時，請拔除馬達線或切換油門HOLD模式，才進行設定；設定完畢後，請重新開啟Gpro電源。
6. 當Gpro與電腦連線時，Gpro會關閉藍牙連線功能，請確認連線結束後重新啟動電腦以藍牙設定時，請先將桌面電腦設定為桌面上使用藍牙連線功能，請重新開啟Gpro電源，再進行藍牙設定。

Gpro CONNECTIVITY METHOD Gpro接線方式

METHOD 1:STANDARD RECEIVER CONNECTIVITY METHOD 方式一:傳統接收機接線法

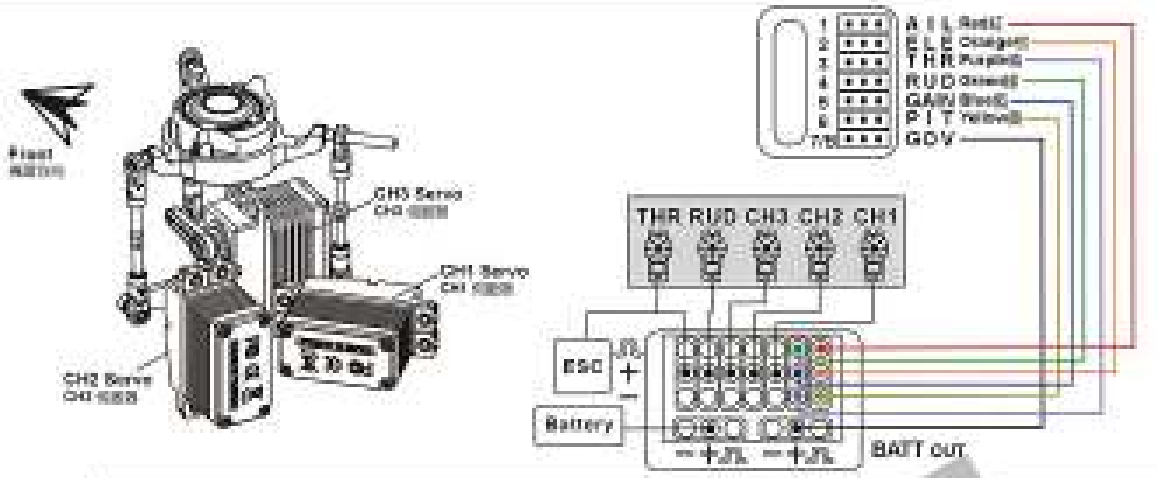

CAUTION 注意 When connecting Gpro to the power supply, make sure the positive and negative electrode are correctly connected. If it's in opposite direction, the over current can cause serious damage to Gpro system.
連接電源時，請注意正負極方向，錯誤方向會導致過流燒毀Gpro系統。

1. Connect all wires as shown in diagram. Receiver and Gpro wires are color coded to distinguish the different connection channels. Care should be taken to ensure proper wire color to channel connection.
2. While using the speed controller that not including BEC, you need to connect the BEC power with Gpro "BATT" port.
3. Receiver power is achieved by connecting the Gpro "S.BUS/X.BUS" port to the ch7 or BATT port on receiver using supplied signal wire.
4. To avoid damage to servos, only digital servos should be used for swashplate. Recommended spec: 0.08s/60 degrees or faster, with 12 Kg.cm or higher torque.
5. Gpro has built in nitro governor function which require purchase of optional governor sensor.

1. 請依照圖示連接線路，接收機與Gpro的接線顏色用不同的顏色來區分不同的連接，請確保請正確連接的顏色線。
2. 使用無BEC輸出的電調時，需額外由Gpro的"BATT"孔位接入BEC電源。
3. 接收機電源透過以隨附的訊號線由Gpro的"S.BUS/X.BUS"孔位接到七通道或BATT通道。
4. 十字盤必須安裝數位伺服器，否則會造成伺服器燒毀。
建議規格：速度0.08秒/60度以內；扭力12kg.cm以上。
5. Gpro內建油門定速功能，需別購定速感測器方能使用。

METHOD 2: FUTABA S.BUS & JR X.BUS CONNECTIVITY METHOD 方式二:FUTABA S.BUS & JR X.BUS接線法

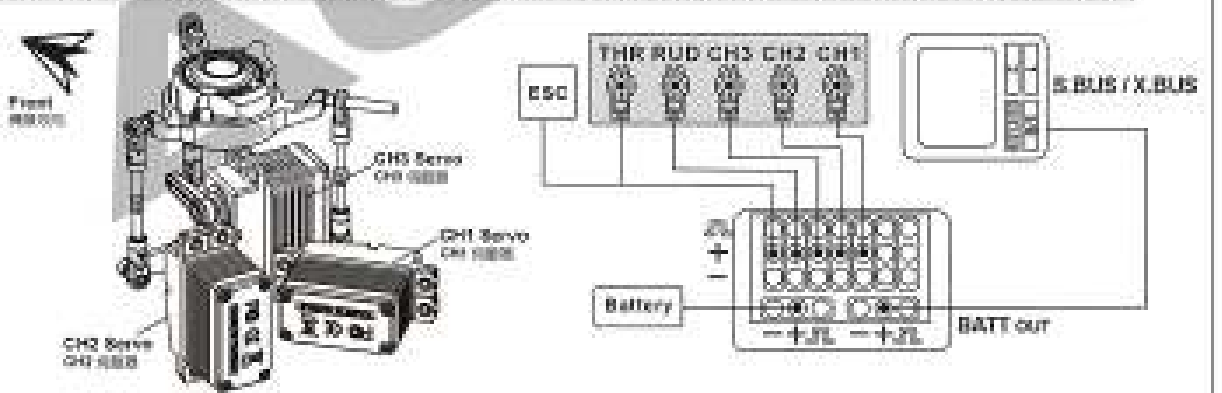

CAUTION 注意
1. When connecting to JR X.BUS, please select X.BUS "MODE A" in transmitter.
2. When connecting Gpro to the power supply, make sure the positive and negative electrode are correctly connected. If it's in opposite direction, the over current can cause serious damage to Gpro system.
1.連接JR X.BUS接線時，請先選擇發射機X.BUS"MODE A"模式。
2.連接電源時，請注意正負極方向，錯誤方向會導致過流燒毀Gpro系統。

1. For Futaba S.BUS and JR X.BUS receivers, connect wires as shown in diagram.
2. While using the speed controller that not including BEC, you need to connect the BEC power with Gpro "BATT" port.
3. Receiver power is supplied through S.BUS/X.BUS signal wire connected to Gpro's "S.BUS/X.BUS" port.
4. To avoid damage to servos, only digital servos should be used for swashplate. Recommended spec: 0.08s/60 degrees or faster, with 12Kg.cm or higher torque.
5. Gpro has built in nitro governor function which require purchase of optional governor sensor.

1. 用於S.BUS及JR X.BUS接收機的Futaba接線圖，請依照圖示進行接線。
2. 使用無BEC輸出的電調時，需額外由Gpro的"BATT"孔位接入BEC電源。
3. 接收機電源利用由S.BUS/X.BUS訊號線接至Gpro的"S.BUS/X.BUS"孔位。
4. 十字盤必須安裝數位伺服器，否則會造成伺服器燒毀。
建議規格：速度0.08秒/60度以內；扭力12kg.cm以上。
5. Gpro內建油門定速功能，需別購定速感測器方能使用。

METHOD 3: JR / SPEKTRUM SATELLITE CONNECTIVITY METHOD 方式三:JR / SPEKTRUM衛星天線接線法

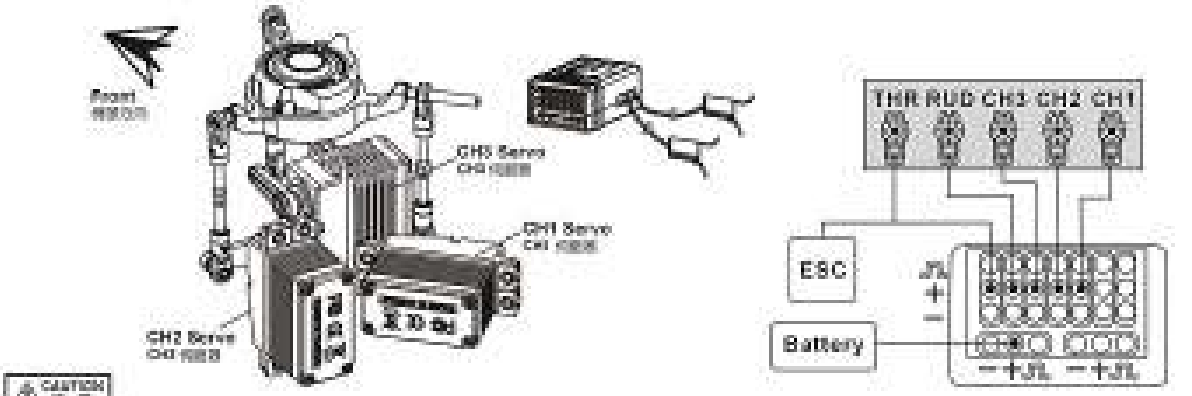

CAUTION 注意

1.When binding, do not mix satellite receivers of different makes.
2.Incompatibility with future models of satellite receivers will be resolved through firmware updates.
3.When connecting Gpro to the power supply, make sure the positive and negative electrode are correctly connected. If it's in opposite direction, the over current can cause serious damage to Gpro system.

1. 不同廠商的衛星天線混用交叉對頻。
2. 如有新型的衛星天線產生不相容情形，將以韌體更新方式解決。
3. 連接電源時，請注意正負極方向，接錯方向會導致過大的Gpro損壞。

1. For JR or SPEKTRUM satellite receivers, connect wires as shown indiagram.
2. While using the speed controller that not including BEC, you need to connect the BEC power with Gpro "BATT" port.
3. To avoid damage to servos, only digital servos should be used for swashplate. Recommended spec: 0.08s/60 degrees or faster, with 12Kg.cm or higher torque.
4. Gpro has built in nitro governor function which require purchase of optional governor sensor.
5. For radios with less than 6 channels, channel 5/GEAR is used for rudder gyro gain. Speed governor cannot be used. For safety concern, two satellite receives should be used, with each antenna perpendicular (90 degrees) from each other. A satellite receiver should be installed on each side of the frame, separate by minimum distance of 5cm.

1. 請依照圖示進行接線。Gpro支援SPEKTRUM與JR兩種衛星天線。
2. 使用無BEC的油門調速器時，須額外由Gpro的"BATT"孔位接入接收機電源。
3. 十字盤必須選擇數位伺服器，請用普通伺服器損壞。
   建議規格：速度0.08秒/60度以內；扭力12kg.cm以上。
4. Gpro 內建氮氣模式，可與選購感測器搭配使用。
5. 為安全起見，請勿使用兩個衛星天線，兩個衛星天線內部的接收器間隔5公分之外，且兩個天線彼此垂直(90度)，每個至少中心分開5公分以上。

BINDING PROCEDURE 對頻方法

Binding : (Hold last command)
對頻：(保持最後指令)
Binding with Failsafe: (Go to preset position)
對頻與失控保護：(回復預設值)

Step 1: Connect power to Gpro, select the satellite receiver type and failsafe type.
Step 2: Re-connect power to Gpro. satellite receiver's LED will blink, indicating entering binding mode.

步驟1.將Gpro接上電源，選擇所使用的衛星天線及失控保護方式。
步驟2.將Gpro重新斷電，此時衛星天線LED燈會開始閃爍進入對頻狀態。

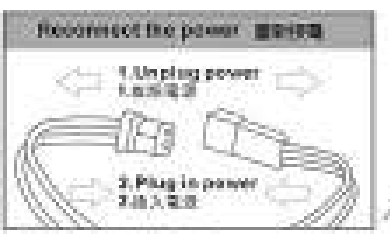

CAUTION 注意

Please disconnect motor wires during binding to prevent dangerous unforeseen circumstances.
對頻時請拔除馬達線，以免發生不可預期之危險

Step 3: Activate binding mode on your transmitter. Receiver LED will remain lit indicating successful binding.
Note: In binding with failsafe mode, receiver's LED will go from fast blink to off immediately after successful binding, followed by slow blinks. Move the transmitter sticks to desired position to set the failsafe position, which will be confirmed with steady lit of LED after 5 seconds.

步驟3.將遙控器啟動對頻模式，對頻完成後衛星天線LED燈會常亮。
註：如選擇"對頻與失控保護"，遙控器對頻完成後，衛星天線上LED燈由快速閃爍直接熄滅，之後再以慢速閃爍；在慢速閃爍狀態時，將遙控器上的所有搖桿及撥動開關設定在所需的失控保護位置，5秒後LED燈會常亮，完成對頻。

1. Please unplug motor wires or activate throttle HOLD when performing Gpro configuration.
2. Compatible with helicopter of all sizes from T-REX 250 to T-REX 800 Gpro Flybarless.

1.進行Gpro設定時，請拔除馬達線或啓動油門HOLD模式，確定安全後再進行開啟Gpro設定。
2.Gpro Flybarless電子控制模組適小型直至中型機型大型直至T-REX 250～T-REX800。

1.SELECT H-1 SWASHPLATE TYPE 選擇H-1十字盤類型

When using Gpro, transmitter must be set to H-1 (1-Servo-Normal) traditional swashplate. Incorrect swashplate setting will cause setup problem and prevent helicopter from flying.

使用Gpro 遙控器必須選擇 H-1 (1-Servo-Normal)傳統十字盤。如果十字盤類型設定錯誤，會造成無法設定問題和不正確無法飛行。

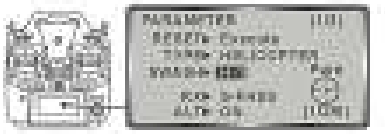

2.PC SOFTWARE INSTALL 電腦安裝軟體

Please go to http://www.align.com.tw/Gpro/ to download and install Gpro PC software.

下載安裝Gpro電腦軟體請至下列網址下載安裝http://www.align.com.tw/Gpro/

Note : If you cannot setup the Gpro Windows version, please check whether you have installed the Microsoft .NET Framework 4.
http://www.microsoft.com/en-US/download/details.aspx?id=17851

註：無法安裝Gpro Windows版本時，請檢查電腦是否有安裝Microsoft .NET Framework 4。
http://www.microsoft.com/zh-TW/download/details.aspx?id=17851

3.LAUNCH THE PC SOFTWARE AND CONNECT TO Gpro 開啟電腦軟體並與Gpro連接

STEP 1: LAUNCH PC SOFTWARE
步驟1：開啓電腦軟體

After software is installed, double click Gpro software and proceed to connect your Gpro with mini USB cable.

軟體安裝完畢後，雙擊Gpro軟體與mini USB線連接Gpro。

STEP 2: POWER ON YOUR TRANSMITTER AND RECEIVER
步驟2：開啓遙控器與接收機電源

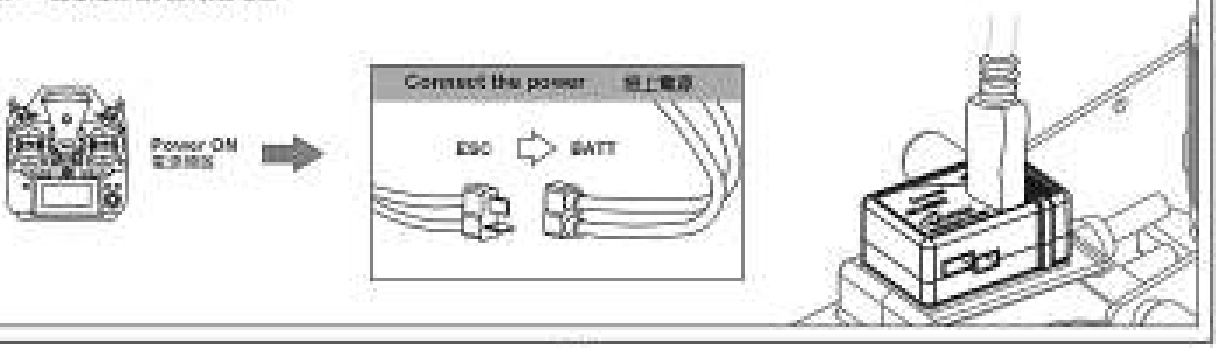

STEP3 ：
步驟3：
PC Interface will display connection status.
電腦介面顯示連線狀況，連線成功會顯示已連線。

Reset Bluetooth PW

Password Setting
設定藍牙密碼

When using smartphone app to make configuration changes, a Bluetooth password must be set for pairing with the smartphone. The factory default password is "0000". We strongly recommend you to change your password to avoid interference with others while Bluetooth transmission.
使用手機軟體介面做參數設定，需設定藍牙連線密碼，使用手機連線配對。預設密碼為"0000"，強力建議您修改密碼避免藍牙傳輸被干擾。

Connected

Connection Status
連線狀態

Note: If connection failed, please check proper connectivity to Gpro, and that Gpro is powered up.
註：若連線失敗，請檢查Gpro連線是否正確，Gpro是否有電源輸入。

4.HELICOPTER HARDWARE CONNECTION 直升機硬體設定

STEP1：
步驟1：
a.Select "Setup Menu" to enter helicopter hardware configuration.
a. 點選"設定機設定"進入機體硬體設定

English

Please select language.
請選擇使用語言

Setup Menu

Setup menu
設定機設定

b.Select "Create New Settings" to wipe our previous settings, and perform the setting from scratch.

1. New helicopters that have not been setup before, please select "Create New Settings" and perform the complete setup procedure.
2. After initial setting of the Gpro, user can select "Edit Current Settings" to make adjustment changes.

b.點選"建立新設定"，清除之前設定的Gpro所有數據所有設定，進行完整設定程序。

1.新的直升機未經過設定的，請必選擇"建立全新設定"按照步驟完整的設定一遍。
2.Gpro 設定完成之後，可以選擇"修改現行設定"，調整Gpro設定。

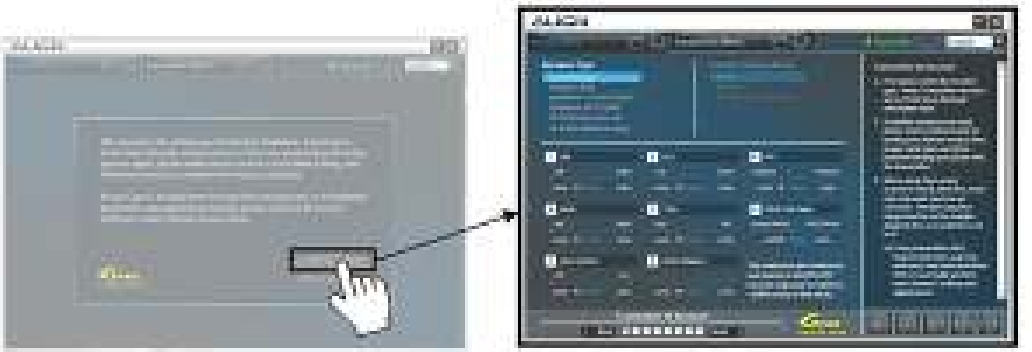

There are 7 settings for helicopter configuration. Press "Next" after completing each and every of the 7 settings.
直升機設定共有7項設定，每完成一項設定請按"Next"繼續設定，每項設定皆須一項項完成。

STEP2 : RC TRANSMITTER AND RECEIVER
步驟2：遙控器與接收器

a.First please select the receiver type.
Note: Transmitter must be set to H-1 (1- Servo- Normal) swashplate type. Please refer to page 34 for binding instruction if satellite receivers are used.

a.請先選擇接收器類型。
注意：遙控器必須設定為H-1 (1-Servo-Normal)傾斜盤十字型模式。如果您選擇衛星接收器，請參考P34的綁定說明。

Note: Entering Gpro helicopter setting, Gpro will depend on the configuration requirements, lock or unlock the helicopter movements. Each icon in the bottom right of the computer interface, represents each helicopter movement, if the icon is illuminated display, it means that you can set to open operation.

注：進入Gpro直升機設定，Gpro會依不同設定需求，鎖定或解鎖直升機動作。電腦介面右下方各動作圖示，如顯示表示將各個動作，如果該動作顯示為照亮顯示，表示可以開啟操作。

b.Movements on the transmitter such as aileron, elevator, collective pitch, etc, must match synchronously with the display on PC interface. Using the diagram below as example, if moving aileron stick does not result in any movement of aileron channel inside PC interface, change the channel number on the upper left corner of aileron so that channel matches between transmitter and PC interface.

b.遙控器之各動作，如副翼、升降、螺槳總距等等，必須與電腦介面上的顯示同步一致。以下圖為例，如果副翼搖桿沒有動，副翼通道的右上角數字沒有改變，此時，可以更改副翼數字左上角的通道數字，讓遙控器與電腦介面的通道相匹配。

Do not allow repetitive numbers when adjusting channel number, otherwise Gpro will not function properly.
調整頻道數字時，不得有重複數字出現，否則會造成Gpro運作異常。

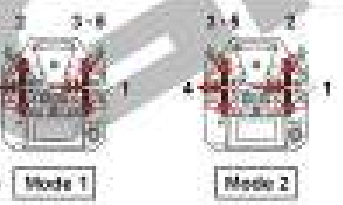

Move the aileron stick, PC interface should display corresponding control movements. Perform this check on all channels.
滾動副翼搖桿，電腦介面上顯示相應的動作圖示。同樣檢查所有的頻道。

Note : When using Gpro, every channel's neutral, direction, max/min end point must be set correctly. Throttle and pitch range must be set to straight diagonal line, and subtrim is set to 0 degrees. Using transmitter stick, channel direction, subtrim, and servo end point functions (EPA / Travel Adj), perform each channel's setting and adjustments.

註：使用Gpro，遙控器各個頻道中位點、方向與最大最小行程，必須確認設定正確。油門與螺槳總距必須為直線對角線，微調設為0度。使用遙控器搖桿、頻道方向、微調、伺服器端點調整(EPA / Travel ADJ)功能，進行各頻道的設定與調整。

c.Center the transmitter stick. At this point the aileron and elevator neutral point must be 0. If it's not 0, adjust using transmitter's subtrim function until 0 is achieved.

c.搖桿置中，此時副翼、升降的中位點必須為0。如果中位點不為0時，請利用遙控器內的調整微調中位點調整為0。

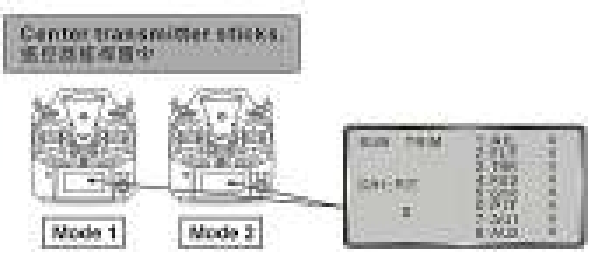

d.Confirm the direction of each channel. If interface displays opposite direction, reverse using the channel reverse function on transmitter so that movement of sticks corresponds to correct direction on interface. In addition, use EPA/Travel Adj function on transmitter to adjust the end points so that max/min travel corresponds to 100% and -100% on the interface.

d.確認各頻道方向，如果介面上顯示方向與搖桿方向相反，請使用發射機的頻道反向功能，讓搖桿動作與介面上的正確方向一致。並且使用EPA，Travel ADJ功能調整點，升降舵行程對應介面上的±100%與-100%。

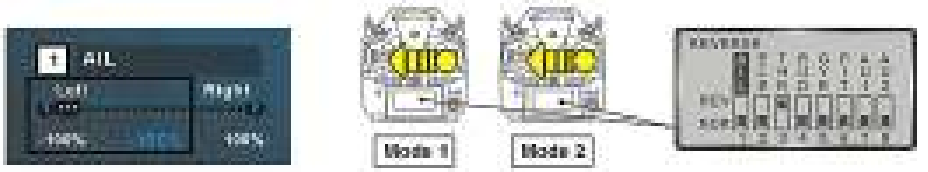

Also confirm all movement directions are correct. Incorrect movements can be reversed through transmitter's reverse function.
同時保證每個動作輸出方向皆正確，如果不正確時，請透過發射機正反轉功能調整正確方向。

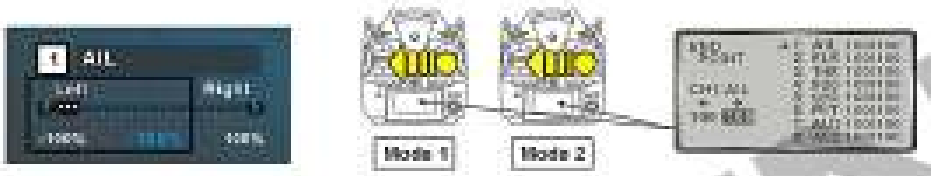

Using the transmitter's EPA/Travel ADJ function, adjust the maximum/minimum travel on the PC interface to 100% and -100% respectively.
使用遙控器EPA，Travel ADJ功能，將電腦介面上最大，最小行程調整為100%與-100%。

Note: Must adjust the max and min travel of aileron/elevator/pitch to correspond with 100% and -100% of transmitter stick.
注意：必須調整副翼，升降，螺旋槳距的最大與最小行程對應遙控器搖桿的100%與-100%。

STEP3：SENSOR MOUNTING & BLADE DIRECTION
步驟3：陀螺儀安裝與主旋翼旋轉方向

a.Gpro can be mounted 4 ways as shown in diagram. Arrow can point forward or backward. User need to select one of the mounting choices based on helicopter design. The actual mounting of the gyroscope must match to the position selected here.

b.In order for Gpro to achieve optimal performance, the main rotor rotation direction needs to be selected. All Align helicopters are clockwise rotation.

a.Gpro有4種安裝方式，如圖所示。箭頭指向前或後。使用者需根據直升機設計，選擇其一方式安裝。陀螺儀安裝方式必須與這裡所選擇的一致。

b.為讓Gpro有最佳表現，使用者必須設定主旋翼旋轉方向。所有Align直升機都為順時針旋轉方向。

Select Gpro install position, and clockwise rotation on main rotor.
選擇Gpro安裝方式，以及主旋翼順時針旋轉方向

STEP4：PITCH DIRECTION & SWASH TYPE
步驟4：螺距方向與十字盤類型

a.Gpro needs to know which direction swashplate moves during positive pitch movement. All Align helicopters have upward moving swashplate during positive pitch.

b.Select the swashplate type based on the helicopter. Then confirm the direction of each movement is correct. If reversed, correct by selecting the corresponding reverse option on this interface.

a.Gpro需要知道當正螺距時，十字盤的移動方向。所有的和通用機型的正螺距十字盤向上的方式。

b.選取適用機十字盤類型，選擇正確的十字盤。接著要確認每個機十字盤運作方向，如有反轉，請透過介面上的相應選項反向，使十字盤運作正確。

For this step, do not reverse the servo using transmitter's reverse function.
此步驟不要使用遙控器的伺服正反向功能。

Select positive pitch swashplate up mode, and HR-3 T-REX 550L Dominator swashplate type.

選擇正螺距十字盤向上方式，以及HR-3 T-REX 550L Dominator的十字盤類型。

Swashplate must move up. If there are any incorrect servo movements, adjust the servo direction per diagram on left until correct movement is achieved.

十字盤必須向上，如有伺服錯誤動作發現，請調整左圖伺服反向，使十字盤動作正確。

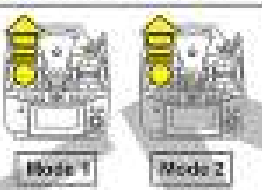

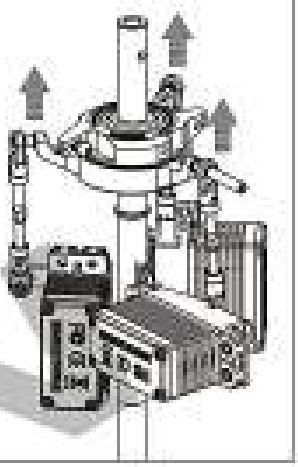

STEP5：SWASHPLATE ADJUSTMENT
步驟5：十字盤調整

a.Adjust the neutral point of each servo and swashplate level. Using the subtrim function on the interface here, adjust the neutral point of each servo so that servo arm is level at 0 degrees. Follow by the adjustment of push rod length or cyclic pitch subtrims here to achieve horizontal level of swashplate.

a.調整每個伺服中立點與十字盤的水平，利用介面上的伺服器微調功能，調一個個伺服器中立點，讓伺服器臂達水平0度，並配合拉桿長度的調整或週期螺距微調，使十字盤呈水平。

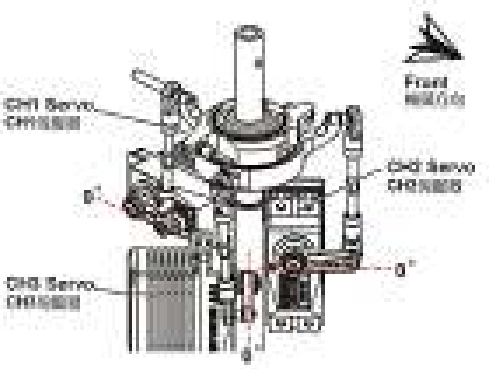

b.Swashplate level can also be adjusted here through cyclic pitch trim function.

b.螺距也可以利用週期螺距微調功能，調整十字盤水平。

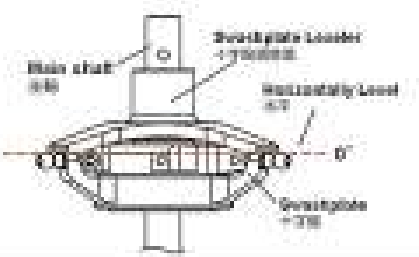

Swash leveler can be used during swashplate leveling adjustments.
調整十字盤水平時可利用十字盤調整器，進行調整，來確保十字盤水平狀態。

c.After swashplate is leveled, adjust the collective pitch using the collective pitch subtrim and a pitch gauge, so that pitch is 0 degrees at collective pitch neutral point.

c.十字盤水平後，利用集體螺距微調及螺距規校準螺距，使集體螺距在中間點螺距0度。

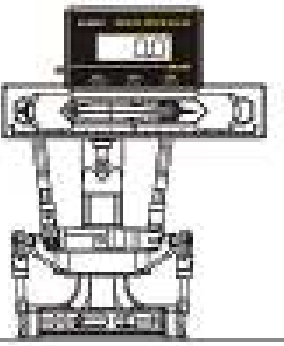

STEP6： COLLECTIVE PITCH AND CYCLIC PITCH

步驟6：集體螺距&週期螺距

a-1.Push throttle stick to maximum position. Using the positive collective pitch parameter and a pitch gauge, adjust the maximum pitch angle. At this time, the cyclic pitch subtrims below can be used to achieve swashplate level during maximum pitch.

a-1. 將油門搖桿推至最大，利用正向集體螺距微調及螺距規校準螺距，此時螺距可以達到最大螺距角度。此時週期微調可用來調整十字盤水平。

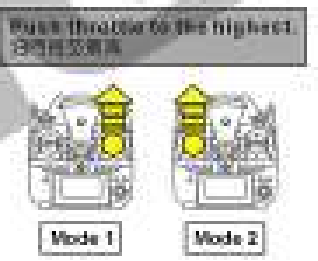

a-2.Push throttle stick to minimum position. Using the positive collective pitch parameter and a pitch gauge, adjust the minimum pitch angle. At this time, the cyclic pitch subtrims below can be used to achieve swashplate level during minimum pitch.

a-2. 將油門搖桿推至最小，利用正向集體螺距微調及螺距規校準螺距，此時螺距可以達到最小螺距角度。此時週期微調可用來調整十字盤水平。

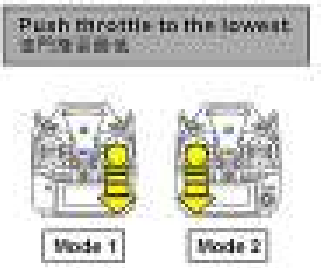

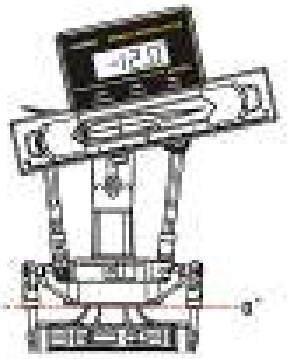

CAUTION 注意

Please unplug motor wires or activate throttle HOLD when performing Gpro configuration.
進行Gpro設定時，請拔除馬達線或啟動油門HOLD模式，設定完畢後再重新開機Gpro電源。

b.Gpro's cyclic pitch must be set to 8 degrees. Push the"Set to 8 degrees pitch" button, swashplate will tilt to one side. Use a pitch gauge and adjust the cyclic pitch parameter until pitch achieve 8 degrees.

b.Gpro 桌面軟件必須設定為"8度"，按下"設定在8度螺距"，此時十字盤會傾斜一邊，使用螺距規測量"螺距螺距"數值，調整直到達到8度。

Note: When adjusting cyclic pitch, swashplate will be locked at "8 degrees cyclic pitch" or"8 degrees pitch" when selected. Press"Release" after completion of adjustments to unlock.

注：調整螺距時，會鎖定"設定在8度螺距"或"8度螺距"，十字盤會傾斜一邊，調整完畢後請按"解除鎖定"鍵，才能解除鎖定。

STEP7：RUDDER SETTING

步驟7：尾槳設定

a.First select the type of rudder servo.

b.Confirm rudder servo direction. Reverse on the interface if needed.

a.先選擇所使用尾槳伺服器種類。

b.確認尾槳方向，如果不正確，可調整介面上的尾槳方向。

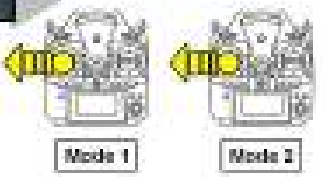

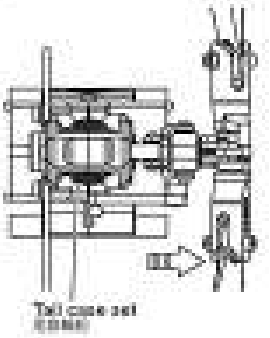

Pushing rudder stick to left will cause tail pitch slider to slide right as show above. Reverse rudder direction if incorrect.

推桿打左邊，尾槳螺距會右移動，如上圖所示。如果不正確，請調整尾槳方向。

c.Rudder center can be adjusted through Neutral Position setting. Please follow the diagram below, adjust so that servo horn is 90° to servo, and rudder pitch slider is in the middle position.

c.您可以利用尾槳中位調整來調整中位點，請參照下圖所示，調整直到伺服器與尾槳成90°，尾槳螺距滑塊在中位置。

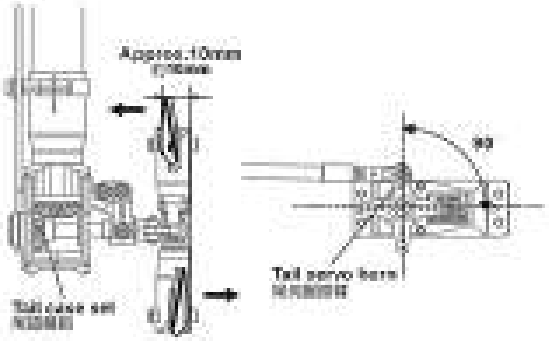

d.Push rudder stick on transmitter all the way left, and adjust the parameter on interface so the rudder is at maximum left without binding.

d.將遙控器舵機搖杆推至最左端，調整介面上的數值，讓左舵盡量大不干涉。

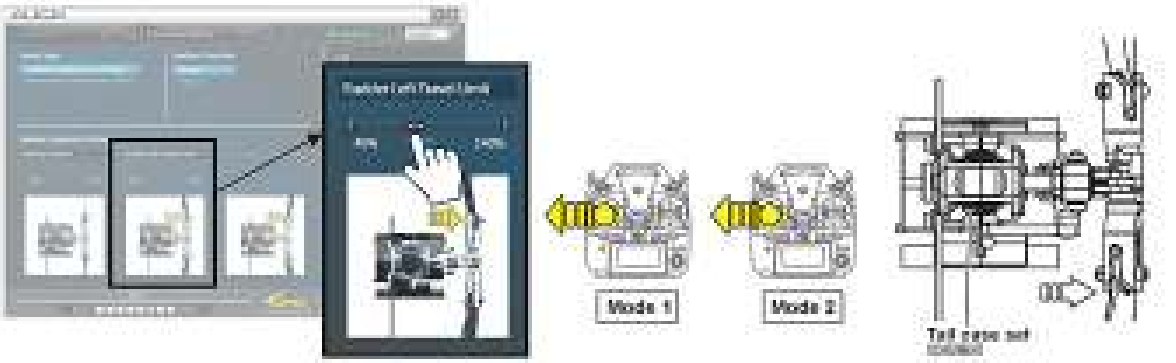

e.Push rudder stick on transmitter all the way right, and adjust the parameter on interface so the rudder is at maximum right without binding.

e.將遙控器舵機搖杆推至最右端，調整介面上的數值，讓右舵盡量大不干涉。

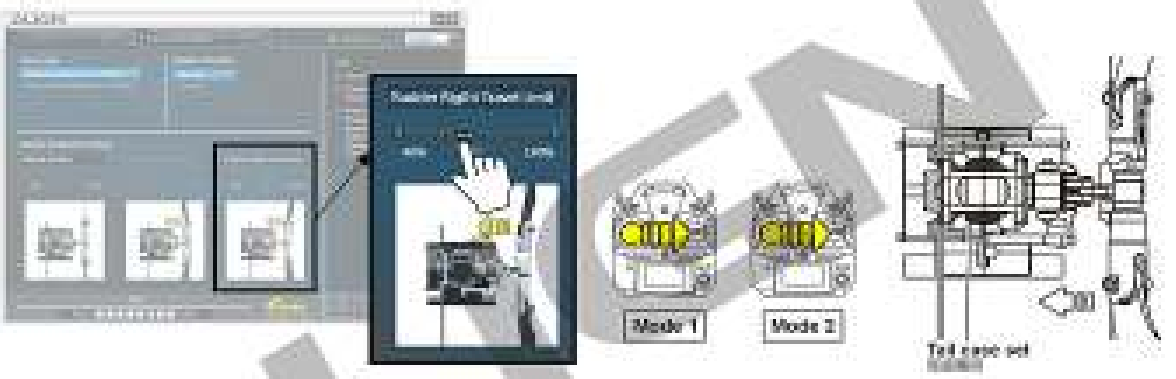

Note: please set the rudder gain in heading lock mode, actual gain value differs amongst servos and helicopters. The goal is to find the maximum gain without tail hunting. This can only be done through actual flight tests.

註：請用航向鎖定模式來調整尾舵增益，因應伺服器與機型的不同會有所差異。一般而言，在不產生尾搖的前提下盡量調高增益，實際的最適增益需透過飛行測試來進行調整。

STEP8：GLOW(NITRO) THROTTLE GOVERNOR

步驟8：引擎轉速調定功能

If your helicopter is an electric helicopter. This section can be skipped.

如果您使用的是電動直升機，請略過此項設定

Glow(nitro) helicopters can activate governor function here. The RPM sensor must be installed correctly on helicopter.

燃油直升機可在此處啟動轉速調定功能使用，直升機上的必須正確安裝轉速感應器。

a.Turn ON governor function, and enter the correct gear ratio.

b.Push throttle stick to minimum position, press SET to record minimum value. Then push throttle stick to maximum and press SET to record maximum value.

a.啓動調定功能，並輸入正確的齒輪比。

b.將油門搖桿推至最低，按下"設定"記錄最小值，接著將油門搖桿推至最高，按下"設定"記錄最大值。

This speed governor function is for nitro power only. Do not activate this function if your helicopter is electric powered. Otherwise it may cause unintentional motor spin-ups, resulting in dangerous situations.

此定速模式為燃油直升機專用功能，如果您的機型為電動直升機，請勿開啟此功能，否則會造成馬達誤啟動，引發危險狀況。

STEP 9: COMPLETE HELICOPTER SETUP.
步驟9：完成直昇機設定

After completing helicopter setup, please proceed to flight parameter setup.

完成直昇機設定後，請繼續進行飛行參數設定。

Load Setup File
讀取設定檔設定檔

Save Setup File
儲存設定檔設定檔

Gpro provides saving function for parameters (both helicopter setting and flight parameters). After completing setup, you can save the configuration parameters into PC for future use.

Gpro提供設定參數儲存機設定，飛行參數儲存功能，設定完畢後，您可以將設定參數儲存至電腦，方便往後設定調用。

5.PARAMETER MENU 飛行參數設定

Flight parameter consists of adjustments to improve helicopter flight characteristics and styles. You can fine tune these parameters to suit your preference. Gpro has flight enhancement specific to helicopter sizes. Please select the correct helicopter class on this settings page.

飛行參數是提升直昇機飛行特性與風格上的調整。您可以微調個人偏好手感與喜好。調整后會根據個別飛行手感。Gpro有針對大小直昇機進行設計優化。請以在此設定頁面，選擇與實際直昇機尺寸相關的設定。

Load Parameter File
讀取飛行參數檔案

Save the file
儲存飛行參數檔案

Gpro provides saving function for parameters (both helicopter setting and flight parameters). After completing setup, you can save the configuration parameters into PC for future use.

Gpro提供設定參數儲存機設定，飛行參數儲存功能，設定完畢後，您可以將設定參數儲存至電腦，方便往後設定調用。

Beginner Settings：If you are a beginner or unfamiliar with radio control, please select "Beginner Settings" so that Gpro can provide more stable and more suitable control feel.

初學者調適參數：當您剛入門或是尚未熟悉遙控器操作時，請選取“初學者調適參數”，此設定會可以讓Gpro有穩定，更適合您的操控手感。

⚠ CAUTION 注意

When Gpro is connected to the PC or smartphone for configuration setup, Gpro will disable electronic speed control. After completing setup, remember to power Gpro back on.

當Gpro與上電腦或手機進行調整時，調速器主馬達動力電源，待完成調整設定後，務必重新將調速器收回電源。

Gpro SPECIFICATIONS Gpro產品規格

1.Operating voltage range:DC 3.5V~8.4V
2.Operating current consumption:<100mA @4.8V
3.X and Y axis Operating Angle Range:-360~+360 degree
4.Z axis Operating Angle Range:-800~+800 degree
5.Sensor resolution:12bit
6.Supports 90/120/135/140 CCPM swashplates
7.Spektrum and JR Satellite antennas support (Replaces original factory receiver)
8.Futaba S.BUS/JR X.BUS system support
9.Rudder support 760μ narrow band servos.
10.Supports multi-blade rotor heads.
11.Engine speed governor range: 10500-21000 RPM
12.Operating Temperature:-20~65degree
13.Operating Humidity:0%~95%
14.Size/Weight:36.5x25.2x15.6 mm Size/11.5g
15.RoHs certification stamp

1.直流電壓:DC 3.5~8.4V
2.直流電流:<100mA @4.8V
3.橫滾與俯仰角度：±360度/sec
4.偏航角度：±800度/sec
5.感測器解析度：12位元(12 BIT)
6.支援傳統90度與120、135、140度CCPM十字盤
7.支援Spektrum與JR衛星天線
8.支援Futaba S.BUS/JR X.BUS系統接收機
9.尾舵支援760μ窄頻伺服器
10.支援多葉旋翼頭
11.引擎轉速調機範圍:10500~21000RPM
12.操作溫度:-20℃~65℃
13.操作濕度:0%~95%
14.尺寸/重量: 36.5x25.2x15.6mm/11.5g
15.符合RoHS規格認證

16.RCM-BL730MX 850KV POWER COLLOCATION REFERENCE 無刷馬達搭配參考表 ALIGN

This new Brushless motor developed by the ALIGN POWER R&D TEAM, is packed with the latest, cutting edge technology available today. It features exceptional levels of high-torque power. The 730MX utilizes an 8-pole outrunner stator motor and unrivaled N48eb extra strong magnets that traditional magnets cannot compare to. Also included is a high temperature, wear-resisting, low friction, double ZZ high efficiency bearing. The 730MX will be the most revolutionary motor operating on low current amperage, and delivering high torque to RC models.

此款無刷馬達是由ALIGN POWER R&D TEAM所研發的最新最尖端科技，具有超凡的高扭力特性。採用8極外轉子定子馬達及無與倫比的N48eb超強磁鐵，其磁力是傳統磁鐵無法比擬的。此款馬達內含耐高溫、耐磨、低摩擦、高效率雙ZZ軸承設計。730MX將是一款能在低電流中運轉產生高扭力的革命性馬達。

RCM-BL730MX MOTOR RCM-BL730MX 無刷馬達

SPECIFICATION 尺寸規格

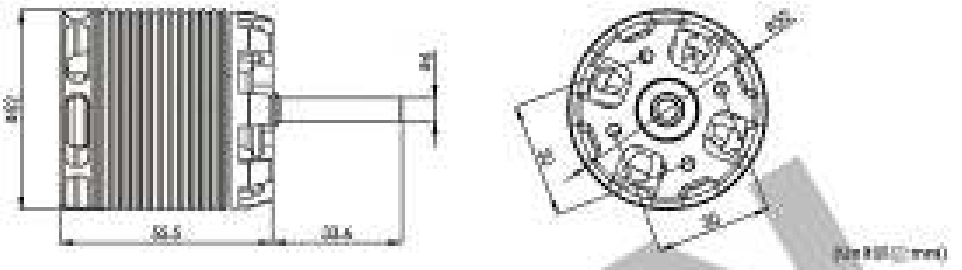

KV KV值	850KV(RPM/V)	Input voltage 輸入電壓	6S
Stator Arms 定子線圈	12	Magnet Poles 磁鐵極數	8
Max continuous current 最大持續電流	115A	Max instantaneous current 最大瞬間電流	195A(5sec)
Max continuous power 最大持續功率	2555W	Max instantaneous power 最大瞬間功率	4338W(5sec)
Dimension 尺寸	Shaft: φ6x52x69.1mm	Weight 重量	Approx. 358g

ILLUSTRATION 接線示意圖

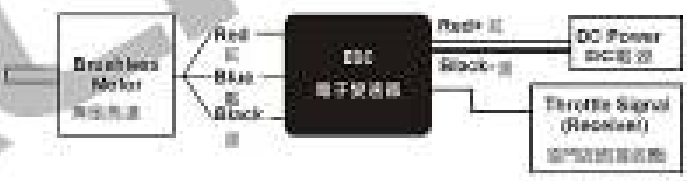

The motor rotates in different direction with different brand ESCs. If the wrong rotating direction happens, please switch any two cables to make the motor rotates in right direction.

由於各廠牌電子變速器的廠牌設定動轉向不盡相同，若發生轉向錯誤時，請將馬達與電子變速器的任兩條線對調即可。

17.CASTLE TALON 90 BRUSHLESS ESC INSTRUCTION MANUAL CASTLE TALON 90 無刷馬達變速器說明書 ALIGN

PRODUCT FEATURES 產品特點

1. Brushless motor operation up to 90 amps with 6S (25.2V) max input.
2. Up to 30 amp BEC output. Continuous rating of 9 amps.
3. User selectable BEC voltage, 5 or 8 volts.
4. Advanced governor modes and autorotate bailout capabilities may be accessed using Castle Link USB adapter (coupon included in this package) and free Windows software. (www.castlecreations.com)

1. 支援6S（25.2V）無刷馬達最大輸入為90安培。
2. BEC最大輸出30安培，持續9安培。
3. 使用者可選擇輸出電壓BEC輸出電壓，5伏或8伏。
4. 透過Castle Link USB轉接器，與免費的Windows軟件 (www.castlecreations.com)，可以使用進階定速模式與緊急迫降功能。

WIRING ILLUSTRATION 接線示意圖

SPECIFICATION 產品規格

1. Operating Voltage： 35 Min 65 Max (12V-25.2V).
2. Continuous Current： 30 amps.
3. Peak Current： 140 amps for 5 seconds. With proper cooling and ESC exterior temp at or below 75C.
4. BEC output： 20 amp peak, 9 amps continuous. Always check servo draw prior to flight.
5. Dimensions： 80(L) x 43 (W) x 18(H) mm.
6. Weight： 84.5g with 150mm power wires.
7. Max RPM： 320,000 divided by motor pole count.

1. 輸入工作電壓：35 -65 (12V-25.2V)。
2. 輸出持續電流：30 amps。
3. 最高瞬間電流：140安培持續時間。需要有適當的散熱和ESC外部溫度75C以下。
4. BEC輸出：瞬時20安培，持續9安培。飛行前請檢查伺服器負載。
5. 尺寸：80(L) x 43 (W) x 18(H) mm。
6. 重量：84.5克含有150mm電源線。
7. 最高RPM：320,000除以馬達極數。

INITIAL SETTINGS AND OPERATION 初始設置和操作

1. Throttle Type： Fixed-Endpoints
2. Throttle Response： 5 medium
3. Initial Spool-Up Rate： 5 medium
4. Head Speed Change Rate： 5 high
5. Low Voltage Cutoff Type： Soft Cutoff
6. PWM Rate： 12 kHz
7. Auto-Lipo Volts/Cell： 3.2 Volts/Cell
8. Cutoff Voltage： Auto-LiPo
9. BEC Voltage： 6.0V

1. 油門類型：固定行程
2. 油門反應：5（中）
3. 啟動加速率：5（中）
4. 主旋翼轉速變化速率：5（高）
5. 低電壓截止類型：軟截電
6. PWM： 12 kHz
7. Auto-Lipo Volts/Cell： 3.2 Volts/Cell
8. 截止電壓：Auto-LiPo
9. BEC 輸出電壓：6.0V

This controller is configured with settings chosen by Align Corporation for this heli and motor combination. No controller programming is required to operate your heli.
The ESC is configured to run your heli motor using a traditional helicopter throttle curve in your radio. Refer to your radio transmitter's instructions for directions.
The Talon 90 ESC requires a LOW throttle setting after power up to arm. Futaba users may have to reverse throttle channel operation for proper operation.

此控制器是根據Align公司為此直升機和馬達組合的設定。無需編程即可使用。
Talon 90 ESC 需要一個油門設定在開機後保持低油門狀態才能啟動馬達。Futaba 使用者需要反轉油門通道操作才能正常運作。

CHANGING USER SELECTABLE SETTINGS BY COMPUTER 用戶可通過電腦更改選擇的設置

This controller supports a number of helicopter throttle types including Castle's direct entry governor mode. Users may access these settings using a Castle Link USB adapter (A coupon for an adapter is included in this package) and Castle's freely downloadable Castle Link software. (www.castlecreations.com).
Most pilots prefer using the direct entry governor mode as it is extremely easy to set up and it offers them optimal performance.
Please visit the Castle website for instructions on how to set up the advanced programmable features of your Castle Talon.

此控制器支持多種直升機油門類型，包括 Castle 直接輸入調速模式。使用者可以透過 Castle Link USB 轉接器（此包裝內附轉接器優惠券）和 Castle Link 軟體（www.castlecreations.com）來存取設定。
許多飛行員偏好使用直接輸入調速模式，因為它設定簡單，並提供最佳性能。
請參閱 Castle 網站說明，以了解如何設定 Castle Talon 的進階可程式設定。

CHANGING USER SELECTABLE SETTINGS BY TRANSMITTER 用戶可通過發射機更改選擇的設置

Once ESC is connected to a motor and radio receiver, follow these steps to enter programming mode and change selected values.
1. Power ESC with TX throttle stick (stick) in the top position (full throttle). LED will repeat a quick single flash.
2. Move stick to the middle. ESC will emit a short tone, and LED repeats a quick double flash. Repeat high / medium through to a triple flash.
3. ESC will emit four short tones, and the LED repeats a long single flash.
4. To step through settings and values by answering "Yes" (full throttle) or "NO" (low throttle). The setting and value are "Flashed" out by the LED. Example: setting #3 value #2. = 3 beeps/flashes, then 2 beeps/flashes. Answering "NO" moves to the next value. A "YES" answer is signaled by rapid LED flashes and a constant beep.
5. Move the stick to the middle position to move to next setting. Repeat steps 4 and 5 as needed.
6. Once the desired settings are entered,and removed, then reconnect power. Arm speed control as normal.

一旦ESC連接到馬達和接收機，請按照下列步驟操作，進入設定模式，並改變所選的值。
步驟1. 將油門推桿（推桿）在頂部位置（全油門）上電給Castle ESC電源。LED將重複快速單閃一次。
步驟2. 將油門推桿移至中間。Castle ESC會發出短音，LED重複快速雙閃一次。高速/中速重複一次，直到三閃。
步驟3. Talon ESC會發出四聲短音，LED會重複長單閃一次。
步驟4. 通過回答"是"（全油門）或"否"（低油門）來逐步設定參數和數值。設置和數值由LED的"閃爍"表示。例如：設置#3數值#2。3次嗶聲/閃爍，接著2次嗶聲/閃爍。回答"否"會移動到下一個數值。回答"是"會通過LED快速閃爍和連續嗶聲表示。
步驟5. 將油門推桿移至中間位置以移動到下一個設置選項。根據需要重複步驟4和5。
步驟6. 一旦輸入並刪除所需的設置，然後重新連接電源。啟動油門控制器作為常規操作。

Setting 設置選項	Battery cell cutoff voltage 電池單格截止電壓	Brake Type 剎車類型	Low Voltage Cutoff Type 低電壓保護截電類型	PWM Switching Rate PWM 頻率
Value 1 數值1	3.0V	Only in fixed wing mode 僅限於固定翼模式	Hard 強截電	8kHz
Value 2 數值2	3.1V	Only in fixed wing mode 僅限於固定翼模式	Soft (Factory setting) 軟截電（出廠設定）	12kHz (factory Setting) 12kHz（出廠設定）
Value 3 數值3	3.2V (Factory setting) 3.2V（出廠設定）	Only in fixed wing mode 僅限於固定翼模式	RPM decrease RPM減少	16kHz
Value 4 數值4	3.3V	Only in fixed wing mode 僅限於固定翼模式	Pulsing throttle 油門間歇性輸出	—
Value 5 數值5	3.4V	Only in fixed wing mode 僅限於固定翼模式	—	—
Value 6 數值6	DISABLED 關閉	Brake disabled (factory setting) 剎車關閉（出廠設定）	—	—

1. Always refer to battery vendor's instructions for voltage setting.
2. Refer to motor manufacturer's instructions for frequency setting.

1. 請參閱電池供應商的指示以設定電壓。
2. 請參閱馬達製造商的指示以設定頻率。

STEP1 步驟1

Turn on Transmitter, and then receiver power.
先開啟遙控器電源，再開啟接收器電源。

STEP2 步驟2

Do not move the helicopter or control sticks so the gyro sensor can initialize properly.
請勿移動直升機與控制桿，以利陀螺儀感測器進入啟動初始程序。

STEP3 步驟3

As shown , swashplate will jump horizontally once indicating successful initialization. If the swashplate is tilted while jumping, this is an indication of improper setup, requiring performing the flybarless setup again (Please refer to flybarless system setup). Until the helicopter is properly initialized, helicopter pitch will not be moveable. If the system cannot initialize and the STATUS LED is flashing red, please check to ensure helicopter is stationary, or if there are any loose connections. After proper initialization, green STATUS LED indicates rudder tail locking mode, while red LED indicate non-tail locking mode.

如圖所，當做好完成後，十字盤會跟著水平上下小幅跳動一次，表示完成啟動程序；若十字盤為傾斜跳動一次，則表示設定錯誤，須進入無平板重新設置設定。（參考Gpro無平板實測設定）完成後機身直升機感測器正常運動中，如果一直無法完成啟動程序STATUS紅燈閃動，請檢查機身是否穩定靜止或有鬆動接頭。確認無誤後，重開機後，STATUS系統會顯示綠燈為尾定模式，紅燈為非尾定模式。

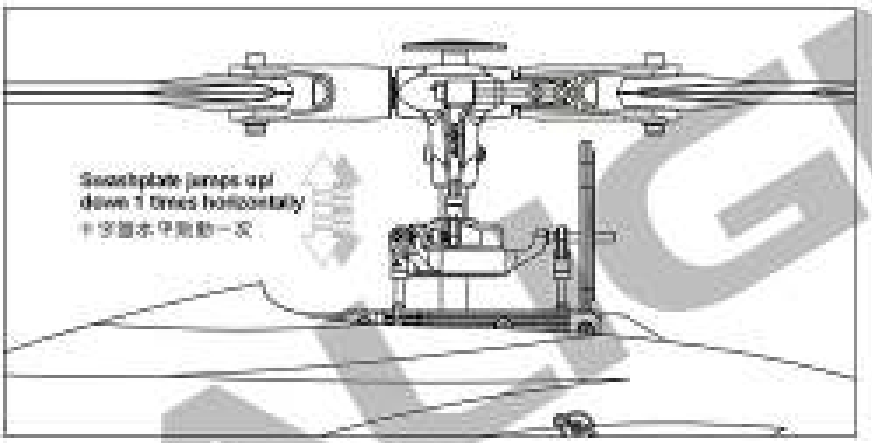

Swashplate jumps up and down 1 times horizontally represents successful initialization.
十字盤水平跳動一次代表正常啟動

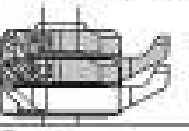

Swashplate jumps up and down 1 times tilted represents setup error.
十字盤傾斜跳動一次代表設定錯誤

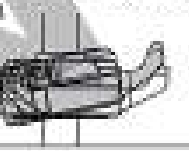

Green = rudder in heading lock mode
Red = rudder in normal mode
綠燈為尾定模式
紅燈為非尾定模式

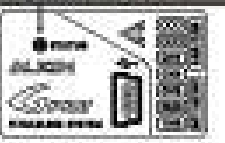

STEP4 步驟4

Tilt the helicopter forward, gyro should compensate by tilting swashplate back. If incorrect, go back to helicopter setup and check for proper setting in gyro and main rotor direction.

將直升機往前傾，陀螺儀應將十字盤向後傾斜，如果不正確，重新進入"直升機設定"檢查陀螺儀及主旋翼方向的設定正確。

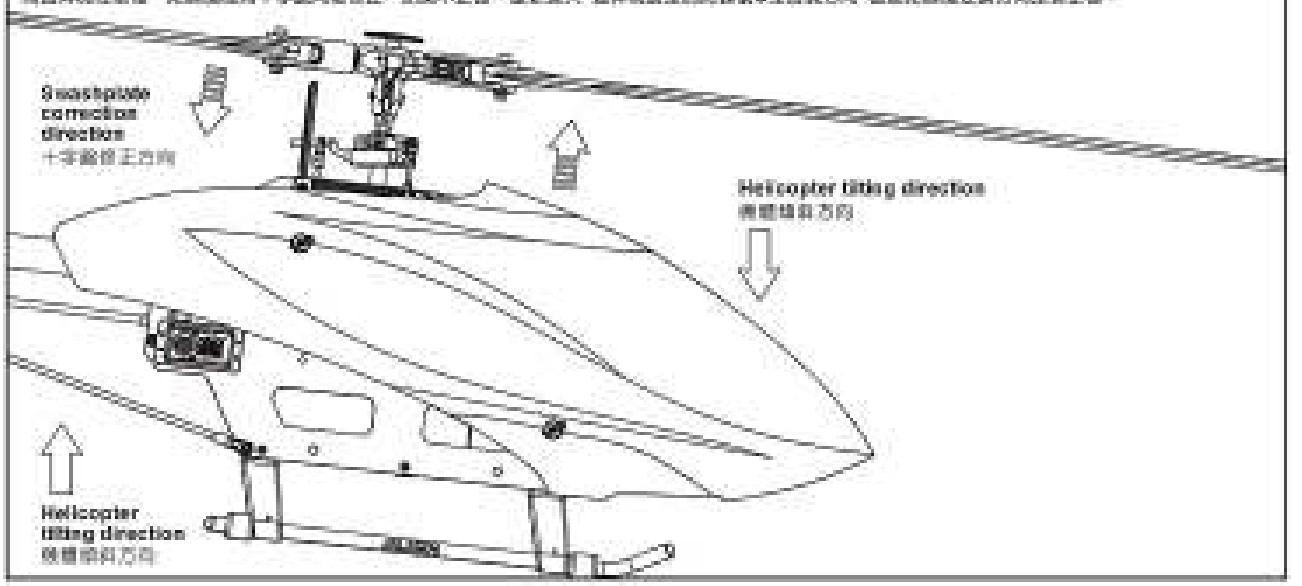

STEP5 步驟5

Tilt the helicopter right, gyro should compensate by tilting swashplate left. If incorrect, go back to helicopter setup and check for proper setting in gyro and main rotor direction.

將直昇機往右傾，陀螺儀應將十字盤向左傾斜，如沒有此動，請回到直昇機設定檢查陀螺儀及主旋翼方向"等設定是否正確。

STEP6 步驟6

Check the center of gravity (CG) and adjust component placement until CG point is right on the main shaft of the helicopter.

檢視直昇機重心是否適當調整直昇機重心位置至主軸中心線下方位置。

STEP7 步驟7

With all above steps checked, restart the system and begin flight test.

確定所有設定完畢，重新開機，完成開機程序後進入飛行測試。

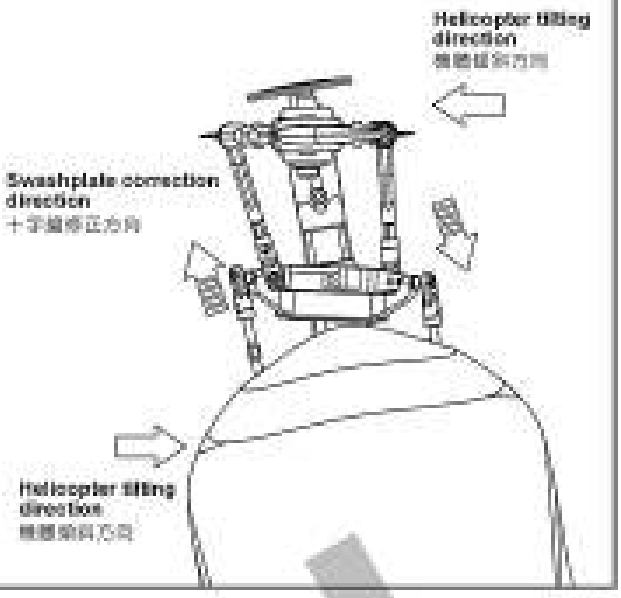

HELICOPTER CG CHECK PROCEDURE 直昇機機體重心檢視方式

After installed the battery, hold the helicopter as shown. Once the helicopter stops rotating, the helicopter's CG can be seen at where the head is pointing relative to the main shaft.

電池設定後，將直昇機如圖示握住，當直昇機停止轉動後檢視機頭方向，即為重心所落在機身（主軸方位）位置。

Adjust the frame's CG within +/- 60 degrees from level.
以水平線上下夾角 60° 內為適當的機體重心位置檢視重心。

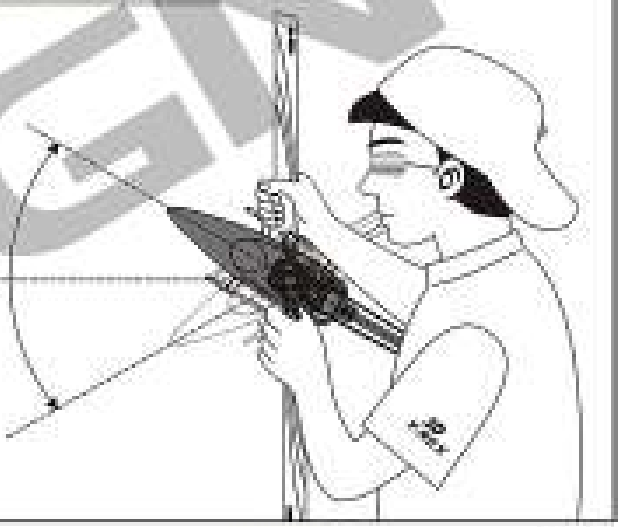

19.FLIGHT ADJUSTMENT AND SETTING 飛行調整與設定

PLEASE PRACTICE SIMULATION FLIGHT BEFORE REAL FLYING 飛行前請先練習模擬飛行

A safe and effective practice method is to use the transmitter flying on the computer through simulator software sold on the market. Do a simulation flight until you familiarize your fingers with the movements of the rudders, and keep practicing until the fingers move naturally.

1. **Place the helicopter in a clear open field (Make sure the power OFF) and the tail of helicopter point to yourself.**
2. **Practice to operate the throttle stick (as below illustration) and repeat practicing "Throttle high/low", "Aileron left/right", "Rudder left/right", and "Elevator up/down".**
3. **The simulation flight practice is very important, please keep practicing until the fingers move naturally when you hear operation orders being call out.**

在還沒練習直昇機飛行前建議先練習模擬飛行，最安全有效的方式為，利用電腦搭配市面上的模擬軟體，以遙控器操作電腦上的模擬飛行，熟悉各種方向舵的動作，並不斷的練習，直到手指可自然的反應各種動作為止。

1.將直昇機放在空曠的地方(請勿電源為關閉)，並將直昇機機尾對準自己。

2.練習操作遙控器的各種動作，如操作方式如下圖，包括練習油門高/低、副翼左/右、升降舵的上/下及方向舵左/右的操作方式。

3.模擬飛行的練習非常重要，請繼續練習直到不需思考，手指能自然隨著聽到的指令做動作為止。

Mode 1	Mode 2	Illustration 图示
Aileron 副翼		Move left 左移 / Rotate left 左旋 / Move right 右移 / Rotate right 右旋
Elevator 升降/俯仰		Fly forward 前进 / Forward rotate 前旋 / Fly backward 後退 / backward rotate 後旋
Throttle 油門		Ascent 上升 / Descent 下降
Rudder 方向		Turn right 右旋 / Turn left 左旋

FLIGHT ADJUSTMENT AND NOTICE 飛行調整與注意

CAUTION 注意

- Check if the screws are firmly tightened.
- Check if the transmitter and receivers are fully charged.
- 再次確認一遍螺絲是否緊固?
- 檢查發射機及接收機是否已充電?

CAUTION 注意

- When arriving at the flying field.
- 抵達飛行場

CAUTION 注意

If there are other radio control aircraft at the field, make sure to check their frequencies and tell them what frequency you are using. Frequency interference can cause your model, or other models to crash and increase the risk of danger.
附近若有其他遥控飛機，請確認他們的頻率，並告知他們正在使用的頻率。頻率干擾會造成本機或其他機墜毀，增加危險的大小。

STARTING AND STOPPING THE MOTOR 發動和停止馬達

CAUTION 注意

First check to make sure no one else is operating on the same frequency. Then place the throttle stick at lowest position and turn on the transmitter.
首先確認附近沒有其他遥控機使用相同頻率。然後把油門搖桿置於最低位置，開啓發射機。

CAUTION 注意

Check if the throttle stick is set at the lowest position.
確認油門搖桿是在最低位置。

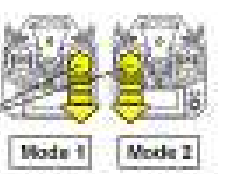

- Are the rudders moving according to the controls?
- Follow the transmitter's instruction manual to do a range test.
- 方向舵是否隨着控制而動作?
- 根據發射機說明書進行距離測試。

- Check the movement.
- 動作檢查

ON! Step1
First turn on the transmitter.
先開啟發射機

ON! Step2
Connect to the helicopter power
連上直升機電源

OFF! Step3
Reverse the above orders to turn off.
倒轉前面的指令以上述操作動作關機。

This procedure is best performed on soft surfaces such as grass. The use of rubber skid stopper is recommended on hard surface to prevent vibration feedback from the ground to Gpro, resulting in over-corrections.

將直升機置於柔軟地面上，建議使用橡膠滑板墊高上面減振動，避免升空時地面反饋震動給加速器數值太大因修正過頭而上飄Gpro，影響平衡效果
和升空前調整修正。

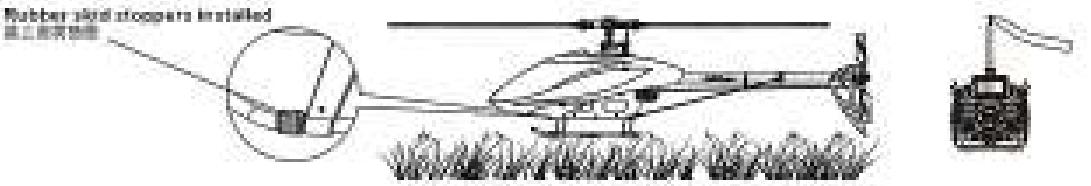

CAUTION 注意

If swashplate should tilt prior to lift off, do not try to manually trim the swashplate level. This is due to vibration feedback to the Gpro, and will disappear once helicopter lifts off the ground. If manual trim is applied, helicopter will tilt immediately after liftoff.

若螺槳盤傾斜，千萬別用遙控器手動調整螺槳盤水平，使十字盤傾斜的原因，是因震動反饋給Gpro所導致的，一旦直升機升空，震動消失，十字盤會自動回復水平。若手動調整十字盤水平，直升機升空後，十字盤會立即傾斜。
切不要升空，若螺槳盤傾斜，請先檢查機械部件是否正常，一般情況下機械問題會導致螺槳盤傾斜。

MAIN ROTOR ADJUSTMENTS 主旋翼槳葉平衡調整

1.Before adjusting, apply a red piece of tape on one blade, or paint a red stripe with a marker or paint to identify on blade.
2.Raise the throttle stick slowly and stop just before the helicopter lifts-off ground. Look at the spinning blades from the side of the helicopter.
3.Look at the path of the rotor carefully. If the two blades rotate in the same path, it does not need to adjustment. If one blade is higher or lower than the other blade, adjust the tracking immediately.

1.調整前先在其中一支主旋翼的槳葉，貼上紅色膠帶或用紅色筆上顏色記號，方便辨識與調整。
2.慢慢推油門搖桿至剛剛離地前停止，在旋轉槳葉的側面，觀察旋轉槳葉的狀態。
3.仔細觀察旋翼軌跡，如兩支旋翼軌跡重疊，則不需調整；如有高低，一定要調整高低不平的槳葉。

a.When rotating, the blade with higher path means the pitch is too big. Please shorten DFC ball link for regular trim.
b.When rotating, the blade with lower path means the pitch too small. Please lengthen DFC ball link for regular trim.

a.旋翼槳葉軌跡高的表示槳葉的PITCH過大，請縮短DFC連桿球頭。
b.旋翼槳葉軌跡低的表示槳葉的PITCH太小，請加長DFC連桿球頭。

CAUTION 注意

Tracking adjustment is very dangerous, so please keep away from the helicopter at a distance of at least 10m.
調整軌跡非常危險，請遠離直升機至少10公尺的距離。

Incorrect tracking may cause vibrations. Please repeat adjusting the tracking to make sure the rotor is correctly aligned. After tracking adjustment, please check the pitch angle is approx. +5~6° when hovering.
不正確的軌跡調整會導致震動，請不斷重複調整軌跡，使旋翼槳葉保持正確。
在調整軌跡後，確認一下Pitch角度在懸停時應為大約+5~6°。

FLIGHT ADJUSTMENT AND NOTICE 飛行調整與注意

◎During the operation of the helicopter, please stand approximately 10M diagonally behind the helicopter.
◎飛行時，請站在直升機後方約10公尺。

CAUTION 注意

◎Make sure that no one or obstructions in the vicinity.
◎For flying safety, please carefully check if every movement and directions are correct when hovering.
◎請確認附近沒有人或障礙物。
◎為了飛行安全，請仔細確認懸停時的每個動作是否正確。

CAUTION 注意 Do not attempt until you have some experiences with the operation of helicopter.
請於具備操作經驗後再嘗試飛行。

STEP 1 THROTTLE CONTROL PRACTICE 油門控制練習

◎When the helicopter begins to lift-off the ground, slowly reduce the throttle to bring the helicopter back down. Keep practicing this action until you control the throttle smoothly.

◎當直升機開始離地時，慢慢降低油門使直升機降下，持續練習直到能控制油門。

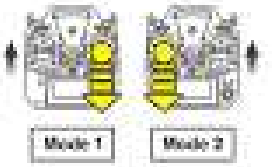

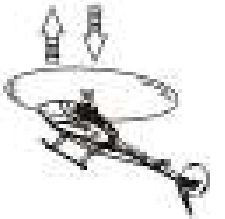

STEP 2 AILERON AND ELEVATOR CONTROL PRACTICE 副翼和升降舵控制練習

1. Raise the throttle stick slowly.
2. Move the helicopter in any direction back, forward, left and right, slowly move the aileron and elevator sticks in the opposite direction to fly back to its original position.

1. 慢慢升起油門搖桿。
2. 任意向前後左右方向，慢慢向相反方向推動副翼和升降舵搖桿直到直升機回到原來位置。

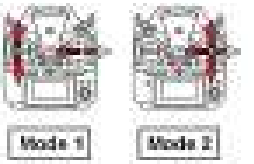

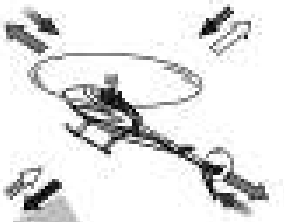

CAUTION 注意

◎If the nose of the helicopter moves, please lower the throttle stick and land the helicopter. Then move your position diagonally behind the helicopter 10M and continue practicing.

◎If the helicopter flies too far away from you, please land the helicopter and move your position behind 10M and continue practicing.

◎當直升機機頭轉動時，請降低油門並且降落，然後移動自己的位置到直升機的斜後方至少10公尺處繼續練習。

◎當直升機飛離你太遠，請降落直升機，並且移動自己的位置到直升機後方10公尺處繼續練習。

STEP 3 RUDDER CONTROL PRACTICING 尾舵控制練習

1. Slowly raise the throttle stick.
2. Move the nose of the helicopter to right or left, and then slowly move the rudder stick in the opposite direction to fly back to its original position.

1. 慢慢升起油門搖桿。
2. 將直升機機頭轉動至左或右，然後慢慢反向推動尾舵搖桿直到直升機回到原來位置。

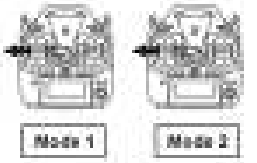

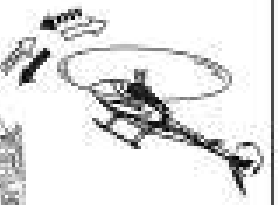

STEP 4

After you are familiar with all actions from STEP1 to 3, draw a circle on the ground and practice within the circle to increase your accuracy.

當你熟悉 STEP1~3 動作後了，在地上畫個圈在圈內練習以增加精確度。

◎You can draw a smaller circle when you get more familiar with the actions.

◎當你更加熟練動作後，你可以畫個小一點圈。

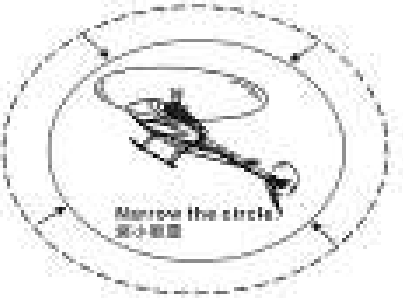

STEP 5 DIRECTION CHANGE AND HOVERING PRACTICE 改變直升機方向和懸停練習

After you are familiar with STEP1 to 4, stand at side of the helicopter and continue practicing STEP1 to 4. Then repeat the STEP1 to 4 by standing right in front of the helicopter.

當你熟悉STEP1~4動作後了，站在直升機的側邊繼續練習STEP1~4，之後，站在直升機機頭的正前面重複以上練習。

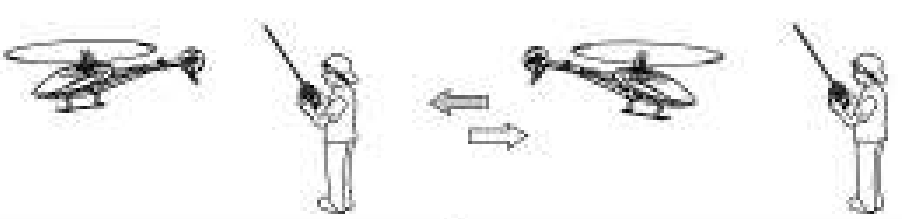

	Problem 狀況	Cause 原因	Solution 對策
Blade Tracking 槳葉平衡	Tracking is Off 槳葉	Pitch linkage rods are not even length PITCH連桿長度調整不平均	Adjust length of DFC ball link. 調整DFC連桿長度
Hover 懸停	Headspeed too low 主旋翼轉速偏低	Recessive pitch 主旋翼的PITCH偏低	Adjust DFC ball link to reduce pitch by 4 to 5 degrees. 調整DFC連桿長度減少Pitch角 4~5度
		Hovering throttle curve is too low 懸停點油門曲線偏低	Increase throttle curve at hovering point on transmitter (around 60%) 調高懸停點油門曲線(約60%)
	Headspeed too high 主旋翼轉速偏高	Not enough pitch 主旋翼的PITCH偏低	Adjust DFC ball link to increase pitch by 4 to 5 degrees. 調整DFC連桿長度增加Pitch角 4~5度
		Hovering throttle curve is too high 懸停點油門曲線偏高	Decrease throttle curve at hovering point on transmitter (around 60%) 調低懸停點油門曲線(約60%)
Rudder Response 尾舵反應	Drifting of tail occurs during hovering, or delay of rudder response when centering rudder stick. 懸停時尾槳有漂移，或是當尾舵回中時，尾槳反應不良	Rudder neutral point improperly set 尾舵中點設定不當	Reset rudder neutral point 重設尾舵中點
		Rudder gyro gain too low 尾舵的Gyro增益偏低	Increase rudder gyro gain 調高尾舵的Gyro增益
	Tail oscillates (hunting, or wags) at hover or full throttle 懸停或全油門時尾槳左右擺動	Rudder gyro gain too high 尾舵的Gyro增益偏高	Reduce rudder gyro gain 降低尾舵的Gyro增益
Oscillation during flight 飛行抖動	Elevator and aileron action causes helicopter to oscillate forward/backward or left/right. 升降舵、副翼的作動會使機體前後/左右抖動	Swashplate gain in flight parameters is too high, causing oscillation. 飛行參數中的十字盤增益過高，產生抖動	Lower swashplate gain. 降十字盤增益
	Helicopter front bobbles (nods) during forward flight. 直線飛行時，機頭點頭	Worn servo, or slack in control links 伺服器老化，控制連桿鬆動	Replace servo, ball link, or linkage balls. 更換伺服器、連桿頭、球頭
Drifting during flight 飛行漂移	Helicopter pitches up during forward flight or aileron input causes helicopter to drift. 直線飛行時機頭上昂或副翼動作機體漂移	Swashplate gain in flight parameter is too low. 飛行參數中的十字盤增益偏低	Increase swashplate gain. 調高十字盤增益
Control Response 動作反應	Slow Forward/Aft/Left/Right input response 對遙控器的動作反應偏慢	Flying style or flight response setting or Flight Parameter is too low. 飛行參數中的飛行風格或動作反應偏低	Increase flying style or flight response. 調高飛行風格或動作反應
	Sensitive Forward/Aft/Left/Right input response 對遙控器的動作反應偏快	Flying style of flight response or Flight Parameter is too high. 飛行參數中的飛行風格或動作反應偏高	Lower flying style or flight response. 調低飛行風格或動作反應

If above solution does not resolve your issues, please check with experienced pilots or contact your Align dealer.
※在經完以上調整後，如仍無法改善情況時，敬立即停止飛行並向有經驗的飛行員請教或連絡您的經銷商。

Q&A 1

Gpro cannot power up after power is applied?
(1)Check if transmitter and helicopter power are on.
(2)Check for proper power to system, and working power cable between Gpro and receiver.
(3)Check if proper receiver type selected.
(4)Check if elevator/aileron channels neutral point is 0 in Gpro's"transmitter and receiver"setting.
(5)Ensure there are no movement during Gpro's initializing process.
Gpro 開機後Gpro無法啟動？
(1)檢查發射機及直升機電源是否開啓。
(2)檢查系統電源供應正常，Gpro與接收器之間電源線安裝正常連接。
(3)檢查接收器類型設定是否正確。
(4)檢查"Gpro"遙控器與接收器"設定，升降，副翼的中位點是否為0。
(5)注意Gpro啟動初始化過程中保持靜止，晃動機身或Gpro不可以啟動。

Q&A 2

Incorrect swashplate movement after setting up Gpro.
(1)Check if transmitter is set to H-1[1-Servo-Normal] traditional swashplate type.
(2)Check "Swashplate Type" on Gpro is set correctly.
(3)Check for correct swashplate servo direction.
(4)Check for correct swashplate servo channel sequence.

Gpro 安裝後舵機，十字盤動作不正確？
(1)檢查遙控器設定為傳統型H-1[1-Servo-Normal]傳統十字盤模式。
(2)檢查Gpro"十字盤類型"是否設定正確。
(3)檢查十字盤伺服機方向設定正確。
(4)檢查十字盤伺服機通道順序正確。

Q&A 3

Helicopter cannot maintain level plane during pirouetting or helicopter tilting forward/back/left/right during takeoff?
Please re-adjust swash plate level.
直升機懸停旋轉時機身不平或起飛時直升機向前後左右傾斜現象？
請重新調整十字盤水平。

Q&A 4

Helicopter tilts forward/back during vertical ascend/descend?
Please adjust the"Collective Pitch Elevator Compensation" option in Flight Parameters. If helicopter's tail dips down when elevator is pulled hard up, this setting can also be adjusted. The more the tail dips, the larger the compensation value.
直升機垂直上升下降時前後傾斜現象？
請調整飛行參數設定的"集體螺距升降補償"。當升降舵拉回至上極限時尾部下壓情況，增加補償數值，下壓幅度越大，補償數值越大。

Q&A 5

Helicopter drifts during flight?
(1)Increase the "Swashplate Gain" in Flight Parameters.
(2)Check if the swashplate servos are too slow (recommended spec calls for servo speed within 0.08sec/60degree).
(3)Note: Only digital servos are supported by Gpro.
直升機飛行偏移現象？
(1)增加飛行參數設定的"十字盤增益"數值。
(2)檢查舵機十字盤伺服機速度太慢情況。（建議選用動作速度0.08sec/60度以內的舵機）
(3)注意：Gpro僅支援數位伺服機。

Q&A 6

Unstable hover, oversensitive control effect?
(1)Try using the"Recommended Beginner Parameters" option in flight parameter.
(2)Lower the"Flying Style" and"Flight Response" parameter in flight parameter menu.
懸停不穩定，操控作動過敏現象？
(1)可嘗試飛行參數設定的"初學者建議參數"。
(2)降低飛行參數設定的"飛行風格"與"飛行回應"數值調整。

Q&A 7

Incorrect helicopter swashplate and rudder compensation direction?
(1)Check Gpro installation position setting is set correctly.
(2)Check proper channel sequence of the swash plate servos.
直升機十字盤與尾舵動作錯誤？
(1)檢查Gpro的安裝方向設定是否正確。
(2)檢查十字盤伺服機通道順序設定是否正確。

Q&A 8

Can parameters be adjusted through Bluetooth during flight?
No. As a safety precaution, Gpro will disable ESC when entering parameter setting mode. If adjustment to Gpro is done through Bluetooth prior to flight, Gpro needs to be power cycled before flying again.
是否可以飛行時藍牙傳輸調整參數？
不行，進入參數設定時，為了安全考慮，Gpro會關閉電子調速器，若飛行前使用藍牙傳輸調整Gpro後，必須重新啟電才能飛行。

Q&A 9

No response when adjusting rudder gain, as if rudder is not compensating.
Check correct setting on rudder gain channel.
調整尾舵增益，沒有反應，尾舵沒有修正動作。
檢查尾舵增益通道設定是否正確。

Q&A 10

Spring action after pirouetting.
(1)Check overall rudder system, and if there are sufficient left/right travel on rudder.
(2)Insufficient rudder gain. Increase gain until there are slight hunting on the rudder, then slightly back off the gain until ideal feel is achieved.
尾舵在旋停上發生彈簧現象。
(1)檢查尾舵機構及左右行程是否足夠。
(2)尾舵回復不足，請增加尾舵增益調整直至出現尾舵，再稍微降低增益至理想狀態。

www.align.com
www.
www.align.con
www.alig
www.align.com.tw
www.align
www.align.com.tw
www.align.com

ALIGN

Specifications & Equipment/規格配備:

Length/機身長:1070mm

Height/機身高:337mm

Main Blade Length/主旋翼長:550mm

Main Rotor Diameter/主旋翼直徑:1248mm

Tail Rotor Diameter/尾旋翼直徑:254mm

Motor Drive Gear/馬達齒輪:16T

Main Drive Gear/主齒輪:112T

Autorotation Tail Drive Gear/尾軸動主齒:131T

Tail Drive Gear/尾翼傳動齒:34T

Drive Gear Ratio/齒輪傳動比: 1:7:3.85

Flying Weight/全配重: Approx. 2790g

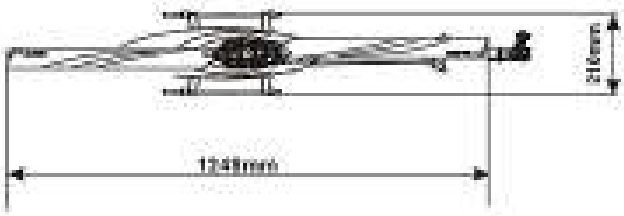

亞拓電器股份有限公司
ALIGN CORPORATION LIMITED MADE IN TAIWAN

2014.Aug.